HK	HONG KONG

Diagram / Parts List

CL004G

CORDLESS CLEANER



2025/04

(HK) CL004G / CORDLESS CLEANER

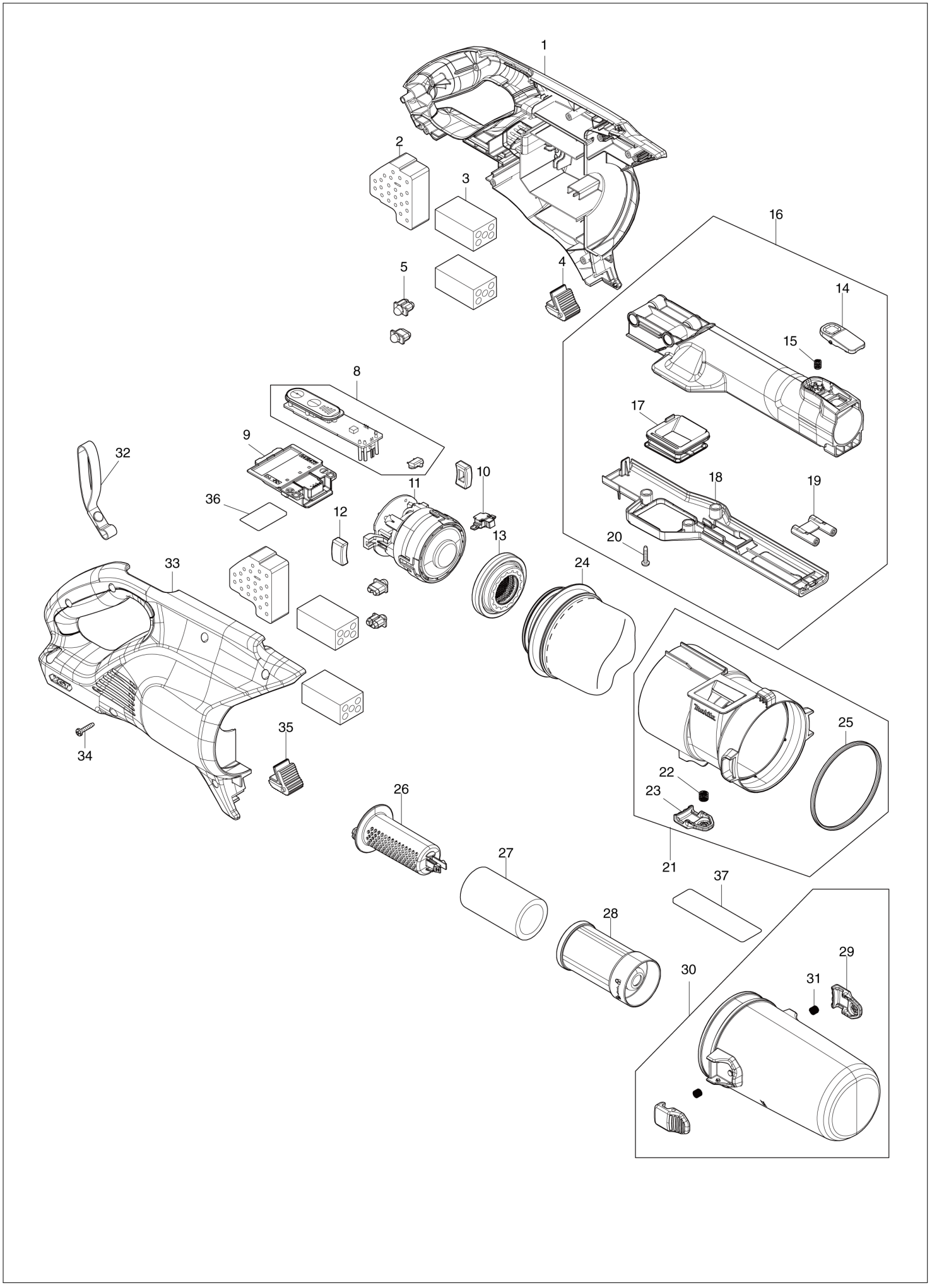

HK HONG KONG

CL004G / CORDLESS CLEANER

Item	Sub	Parts No.	Parts Description	Qty	I/C	E/C No.	Close No.	Remark
001		1831F3-8	HOUSING SET	1				
	C10	263005-3	RUBBER PIN 6	2				
	C20	422C30-3	SPONGE SHEET 14-35	1				
	C30	422C32-9	SPONGE SHEET 18-48	1				
	D10		INC. 33					
002		422C24-8	SPONGE SHEET	2				
003		422C29-8	SPONGE 45	4				
004		422C33-7	RUBBER PLATE	1				
005		422C28-0	MOTOR SUPPORT M	4				
008		620R96-9	CONTROLLER COMPLETE	1				
009		632P49-4	TERMINAL UNIT	1				
010		141H09-2	LED CASE COMPLETE	1				
011		629D18-2	MOTOR ASSEMBLY	1				
012		422816-7	MOTOR COVER SEAL	2				
013		422C25-6	MOTOR SUPPORT F	1				
014		4132F3-3	BUTTON	1				
015		232485-4	COMPRESSION SPRING 5	1				
016		137316-1	INLET ASS'Y	1				
	D10		INC. 14,15,17-20					
017		422C26-4	INLET SEAL	1				
018		4132E8-6	INLET COVER	1				
019		638B08-2	LEAD UNIT	1				
020		266429-2	TAPPING SCREW 3X16	3				
021		137292-9	FILTER CASE ASSEMBLY	1				
	D10		INC. 22,23,25					
022		232460-0	COMPRESSION SPRING 7	1				
023		4132F4-1	STOPPER	1				
024		1915P2-0	FILTER H SET	1				
025		422C27-2	SEAL RING 76	1				
026		4132F1-7	MESH PIPE	1				
027		422C31-1	SPONGE FILTER	1				
028		4132F2-5	PRE FILTER	1				
029		4132F4-1	STOPPER	2				
030		137290-3	DUST BOX ASSEMBLY	1				
	D10		INC. 29,31					
031		232460-0	COMPRESSION SPRING 7	2				
033		1831F3-8	HOUSING SET	1				
	C10	263005-3	RUBBER PIN 6	2				
	C20	422C30-3	SPONGE SHEET 14-35	1				
	C30	422C32-9	SPONGE SHEET 18-48	1				
	D10		INC. 1					
034		266429-2	TAPPING SCREW 3X16	9				
035		422C33-7	RUBBER PLATE	1				
036		8149S3-3	CL004G SERIAL NO. LABEL	1				
037		8149S2-5	CL004G NAME PLATE	1				
A01		1915P8-8	NOZZLE ASSEMBLY SET	1				
	D10		COMPO-PARTS					
A02		1915P4-6	PIPE ASSEMBLY SET	1				
	D10		COMPO-PARTS					
A03		4132G4-8	SASH NOZZLE	1				
A04		4132G5-6	NOZZLE HOLDER	1				
A05Y		***DC40RA	DC40RA FAST CHARGER	1				
	D10		COMPO-PARTS					
A06Y		191B36-3	BATTERY BL4025 SET	1				
A07Y		412393-7	BATTERY COVER	1				

Y:CL004GD102(H)
Z:CL004GZ01(N)

Interchange
O : Yes
X : No
< : the new part can be substituted for the current.
> : the current part can be substituted for the new.
S : Interchangeable as a set.