ENGLISH: Original instructions

INSTRUCTION MANUAL

Cordless Cleaner

CL200FD

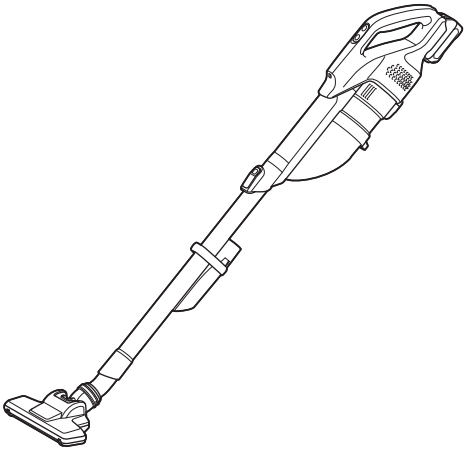

Read before use.

WARNING

- For users in Europe: This appliance can be used by children aged from 8 years and above and persons with reduced physical, sensory or mental capabilities or lack of experience and knowledge if they have been given supervision or instruction concerning use of the appliance in a safe way and understand the hazards involved. Children shall not play with the appliance. Cleaning and user maintenance shall not be made by children without supervision.
- For users in areas other than Europe: This appliance is not intended for use by persons (including children) with reduced physical, sensory or mental capabilities, or lack of experience and knowledge, unless they have been given supervision or instruction concerning use of the appliance by a person responsible for your safety.
- Children must be supervised to ensure that they do not play with the appliance.
- CAUTION: Before carrying out any maintenance operation, disconnect the appliance from the power supply. Perform maintenance on the appliance periodically.
- Rechargeable batteries must be removed from the device before charging.
- To remove or install the battery, slide the cartridge out of the tool while pressing the button on the front of the cartridge.
- Exhausted batteries must be removed from the device and disposed of safely. Follow local regulations regarding battery disposal.
- If the device is to be stored unused for a long period, the batteries should be removed.
- The power terminals must not be short-circuited.

Applicable battery cartridge and charger

Battery cartridge	BL1016 / BL1021B / BL1041B / BL1050B
Charger	DC10SA / DC10SB / DC10WC / DC10WD

- Some of the battery cartridges and chargers listed above may not be available depending on your region of residence.

⚠***WARNING:*** **Only use the battery cartridges and chargers listed above.** Use of any other battery cartridges and chargers may cause injury and/or fire.

SPECIFICATIONS

Model:		**CL200FD**
Capacity		250 mL
Continuous use (with battery BL1050B)	1 (Normal speed mode)	Approx. 66 min
	2 (High speed mode)	Approx. 40 min
	3 (Max speed mode)	Approx. 20 min
Overall length (with pipe, nozzle, and battery BL1050B)		1,036 mm
Rated voltage		D.C. 10.8 V - 12 V max
Net weight		0.82 - 0.98 kg

- Due to our continuing program of research and development, the specifications herein are subject to change without notice.
- Specifications may differ from country to country.
- The weight does not include accessories but battery cartridge(s). The lightest and heaviest combination weight of the appliance and battery cartridge(s) are shown in the table.

Symbols

The followings show the symbols which may be used for the equipment. Be sure that you understand their meaning before use.



Read the instruction manual.

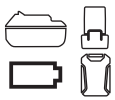

A representative battery applicable to this product.



Only for EU countries
Due to the presence of hazardous components in the equipment, waste electrical and electronic equipment, accumulators and batteries may have a negative impact on the environment and human health.
Do not dispose of electrical and electronic appliances or batteries with household waste!
In accordance with the European Directive on waste electrical and electronic equipment and on accumulators and batteries and waste accumulators and batteries, as well as their adaptation to national law, waste electrical equipment, batteries and accumulators should be stored separately and delivered to a separate collection point for municipal waste, operating in accordance with the regulations on environmental protection.
This is indicated by the symbol of the crossed-out wheeled bin placed on the equipment.

Intended use

The tool is intended for collecting dry dust.

SAFETY WARNINGS

Cordless cleaner safety warnings

⚠***WARNING:*** **IMPORTANT! READ CAREFULLY all safety warnings and all instructions BEFORE USE.** Failure to follow the warnings and instructions may result in electric shock, fire and/or serious injury.

1. **Do not expose to rain. Store indoors.**
2. **Do not allow to be used as a toy. Close attention is necessary when used by or near children.**
3. **Use only as described in this manual. Use only manufacturer's recommended attachments.**
4. **Do not use with damaged battery. If the appliance is not working as it should, has been dropped, damaged, left outdoors, or dropped into water, return it to a service center.**
5. **Do not handle the appliance with wet hands.**
6. **Do not put any object into openings. Do not use with any opening blocked; keep free of dust, lint, hair, and anything that may reduce air flow.**
7. **Keep hair, loose clothing, fingers, and all parts of body away from openings and moving parts.**
8. **Turn off all controls before removing the battery.**
9. **Use extra care when cleaning on stairs.**
10. **Do not use to pick up flammable or combustible liquids, such as gasoline, or use in areas where they may be present.**
11. **Use only the charger supplied by the manufacturer to recharge.**
12. **Do not pick up anything that is burning or smoking, such as cigarettes, matches, or hot ashes.**
13. **Do not use without dust bag and/or filters in place.**
14. **Do not charge the battery outdoors.**
15. **Recharge only with the charger specified by the manufacturer.** A charger that is suitable for one type of battery pack may create a risk of fire when used with another battery pack.
16. **Use appliances only with specifically designated battery packs.** Use of any other battery packs may create a risk of injury and fire.
17. **When (the) battery pack is not in use, keep it away from other metal objects, like paper clips, coins, keys, nails, screws or other small metal objects, that can make a connection from one terminal to another.**
18. **Under abusive conditions, liquid may be ejected from the battery; avoid contact. If contact accidentally occurs, flush with water.**
19. **Do not use a battery pack or appliance that is damaged or modified.** Damaged or modified batteries may exhibit unpredictable behaviour resulting in fire, explosion or risk of injury.
20. **Do not expose a battery pack or appliance to fire or excessive temperature.** Exposure to fire or temperature above 130 °C may cause explosion.
21. **Follow all charging instructions and do not charge the battery pack or appliance outside the temperature range specified in the instructions.** Charging improperly or at temperatures outside the specified range may damage the battery and increase the risk of fire.
22. **Do not let familiarity gained from frequent use of tools allow you to become complacent and ignore tool safety principles.** A careless action can cause severe injury within a fraction of a second.

SAVE THESE INSTRUCTIONS.

ADDITIONAL SAFETY RULES

This appliance is intended for household use.

1. **Read this instruction manual and the charger instruction manual carefully before use.**
2. **Do not pick up the following materials:**
   - **Hot substances that are burning or smoking (cigarettes, matches, incense sticks, candles, hot ashes), sparks and metal dust generated by cutting or grinding metal, etc.**
   - **Flammable liquid (kerosene, gasoline, solvents such as benzine, thinner, etc.)**
   - **Flammable material (toner, paint, spray, etc.)**
   - **Explosive or pyrophoric substances (nitroglycerin, aluminum, magnesium, titanium, zinc, red phosphorus, yellow phosphorus, celluloid, etc. and their dust, gas or steam)**
   - **Liquid, oil, wet dirt or damp garbage, including vomit and excreta**
   - **Hard pieces with sharp edges (wood chips, metals, stones, glasses, nails, pins, razors or cutlery)**

— **Solidifying and conductive fine powder (metal or carbon powder)**
— **Foam like carpet cleaning agent, etc. (they may cause explosion or fire)**
— **Large amount of powder (flour, fire extinguisher powder, etc.)**
— **Substances that cause toxic symptoms**
— **Aggressive chemicals (acid, alkali, etc.)**
— **Fine binding powder such as cement**
— **Fine particle like concrete dust**
— **Desiccants**
— **Asbestos**
— **Pesticides**

Such action may cause fire, injury and/or property damage.
To reduce your exposure to these chemicals, always wear approved respiratory protection such as dust masks that are specially designed to filter out microscopic particles. Direct the exhaust air away from your face and body.

3. **Stop operation immediately if you notice anything abnormal.**
4. **If you drop or strike the cleaner, check it carefully for cracks or damage before operation.**
5. **Do not bring close to stoves or other heat sources.**
6. **Do not block the intake hole or vent holes.**
7. **Avoid using water to clean the tool unless explicitly instructed in this manual.** Failure to follow these instructions may result in electric shock.

SAVE THESE INSTRUCTIONS.

Important safety instructions for battery cartridge

1. **Before using battery cartridge, read all instructions and cautionary markings on (1) battery charger, (2) battery, and (3) product using battery.**
2. **Do not disassemble or tamper with the battery cartridge.** It may result in a fire, excessive heat, or explosion.
3. **If operating time has become excessively shorter, stop operating immediately. It may result in a risk of overheating, possible burns and even an explosion.**
4. **If electrolyte gets into your eyes, rinse them out with clear water and seek medical attention right away. It may result in loss of your eyesight.**
5. **Do not short the battery cartridge:**
   (1) **Do not touch the terminals with any conductive material.**
   (2) **Avoid storing battery cartridge in a container with other metal objects such as nails, coins, etc.**
   (3) **Do not expose battery cartridge to water or rain.**

   A battery short can cause a large current flow, overheating, possible burns and even a breakdown.
6. **Do not store and use the tool and battery cartridge in locations where the temperature may reach or exceed 50 °C (122 °F).**
7. **Do not incinerate the battery cartridge even if it is severely damaged or is completely worn out. The battery cartridge can explode in a fire.**
8. **Do not nail, cut, crush, throw, drop the battery cartridge, or hit against a hard object to the battery cartridge.** Such conduct may result in a fire, excessive heat, or explosion.
9. **Do not use a damaged battery.**
10. **The contained lithium-ion batteries are subject to the Dangerous Goods Legislation requirements.**
    For commercial transports e.g. by third parties, forwarding agents, special requirement on packaging and labeling must be observed.
    For preparation of the item being shipped, consulting an expert for hazardous material is required.
    Please also observe possibly more detailed national regulations.
    Tape or mask off open contacts and pack up the battery in such a manner that it cannot move around in the packaging.
11. **When disposing the battery cartridge, remove it from the tool and dispose of it in a safe place. Follow your local regulations relating to disposal of battery.**
12. **Use the batteries only with the products specified by Makita.** Installing the batteries to non-compliant products may result in a fire, excessive heat, explosion, or leak of electrolyte.
13. **If the tool is not used for a long period of time, the battery must be removed from the tool.**
14. **During and after use, the battery cartridge may take on heat which can cause burns or low temperature burns. Pay attention to the handling of hot battery cartridges.**
15. **Do not touch the terminal of the tool immediately after use as it may get hot enough to cause burns.**
16. **Do not allow chips, dust, or soil stuck into the terminals, holes, and grooves of the battery cartridge.** It may cause heating, catching fire, burst and malfunction of the tool or battery cartridge, resulting in burns or personal injury.
17. **Unless the tool supports the use near high-voltage electrical power lines, do not use the battery cartridge near high-voltage electrical power lines.** It may result in a malfunction or breakdown of the tool or battery cartridge.
18. **Keep the battery away from children.**

SAVE THESE INSTRUCTIONS.

⚠***CAUTION:*** **Only use genuine Makita batteries.** Use of non-genuine Makita batteries, or batteries that have been altered, may result in the battery bursting causing fires, personal injury and damage. It will also void the Makita warranty for the Makita tool and charger.

NOTICE: Makita is not responsible for any accidents resulting from the use of non-genuine Makita batteries or batteries that have been modified. Genuine Makita batteries have been rigorously evaluated for compatibility with Makita tools and chargers, in line with applicable legislation and safety standards.

Tips for maintaining maximum battery life

1. **Charge the battery cartridge before completely discharged. Always stop tool operation and charge the battery cartridge when you notice less tool power.**
2. **Never recharge a fully charged battery cartridge. Overcharging shortens the battery service life.**
3. **Charge the battery cartridge with room temperature at 10 °C - 40 °C (50 °F - 104 °F). Let a hot battery cartridge cool down before charging it.**
4. **When not using the battery cartridge, remove it from the tool or the charger.**

FUNCTIONAL DESCRIPTION

⚠***CAUTION:*** **Always be sure that the tool is switched off and the battery cartridge is removed before adjusting or checking function on the tool.**

⚠***CAUTION:*** **Take care not to trap finger(s) between cleaner and battery as shown in diagram when loading battery.** Trapping finger(s) may cause injury.

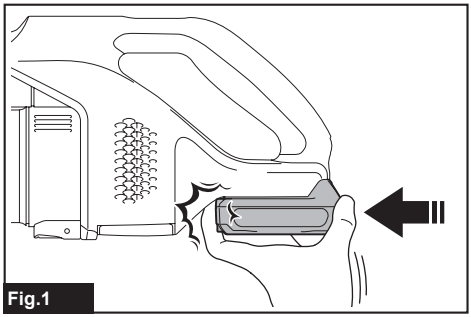

Fig.1

Installing or removing battery cartridge

⚠***CAUTION:*** **Always switch off the tool before installing or removing of the battery cartridge.**

⚠***CAUTION:*** **Hold the tool and the battery cartridge firmly when installing or removing battery cartridge.** Failure to hold the tool and the battery cartridge firmly may cause them to slip off your hands and result in damage to the tool and battery cartridge and a personal injury.

To install the battery cartridge, align the tongue on the battery cartridge with the groove in the housing and slip it into place. Insert it all the way until it locks in place with a little click. If you can see the red indicator as shown in the figure, it is not locked completely.

To remove the battery cartridge, slide it from the tool while sliding the button on the front of the cartridge.

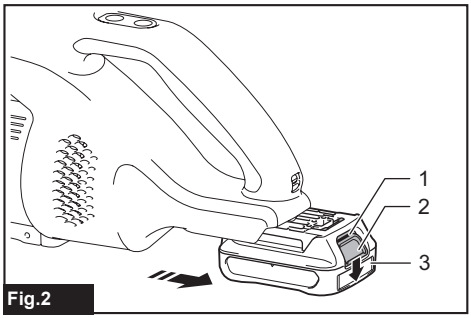

Fig.2

► **1.** Red indicator **2.** Button **3.** Battery cartridge

⚠***CAUTION:*** **Always install the battery cartridge fully until the red indicator cannot be seen.** If not, it may accidentally fall out of the tool, causing injury to you or someone around you.

⚠***CAUTION:*** **Do not install the battery cartridge forcibly.** If the cartridge does not slide in easily, it is not being inserted correctly.

Tool / battery protection system

The tool is equipped with tool/battery protection system. This system automatically cuts off power to the motor to extend tool and battery life. The tool will automatically stop during operation if the tool or battery is placed under one of the following conditions.

Overloaded:
The tool/battery is operated in a manner that causes it to draw an abnormally high current.
In this situation, turn the tool off and stop the application that caused the tool to become overloaded. Then turn the tool on to restart.

Overheated:
The tool/battery is overheated. In this situation, let the tool/battery cool before turning the tool on again.

Low battery voltage:
The remaining battery capacity is too low and the tool will not operate. In this situation, remove and recharge

the battery.

Protections against other causes:
Protection system is also designed for other causes that could damage the tool and allows the tool to stop automatically. Take all the following steps to clear the causes, when the tool has been brought to a temporary halt or stop in operation.

1. Turn the tool off, and then turn it on again to restart.
2. Charge the battery(ies) or replace it/them with recharged battery(ies).
3. Let the tool and battery(ies) cool down.

If no improvement can be found by restoring protection system, then contact your local Makita Service Center.

Indicating the remaining battery capacity

Only for battery cartridges with the indicator

Press the check button on the battery cartridge to indicate the remaining battery capacity. The indicator lamps light up for a few seconds.

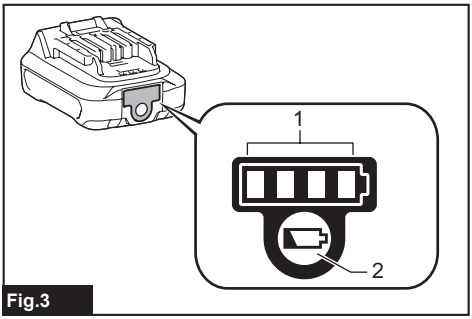

Fig.3

► **1.** Indicator lamps **2.** Check button

Indicator lamps		Remaining capacity
■ Lighted	□ Off	
■ ■ ■ ■		75% to 100%
■ ■ ■ □		50% to 75%
■ ■ □ □		25% to 50%
■ □ □ □		0% to 25%

NOTE: Depending on the conditions of use and the ambient temperature, the indication may differ slightly from the actual capacity.

Switch action

To start the cleaner, simply push the ON/speed change button. To switch off, push the OFF button.
You can change the cleaner speed in three steps by pushing the ON/speed change button.
The first push on this button is for high speed mode, the second push for max speed mode and the third push for normal speed mode. Each push on this button repeats the high/max/normal speed cycle alternatively.

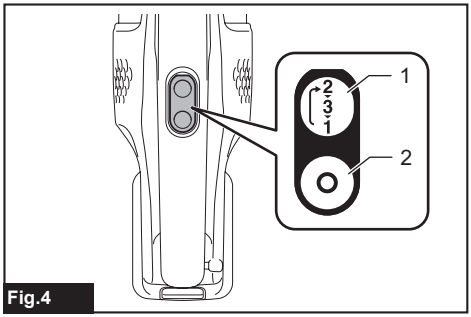

Fig.4

► **1.** ON/speed change button **2.** OFF button

Lighting up the lamp

⚠*CAUTION:* Do not look into the light or look directly at the light source.

To turn on the lamp, push the ON/speed change button. Push the OFF button to turn off the lamp. During the tool actuating, the lamp turns on.
When the remaining battery capacity gets low, the lamp starts blinking.

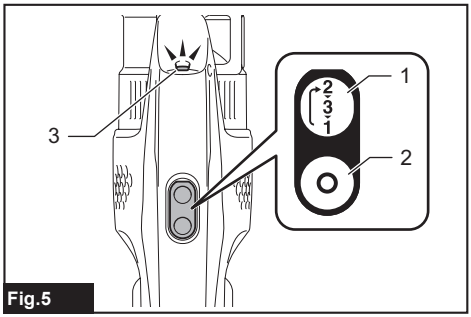

Fig.5

► **1.** ON/speed change button **2.** OFF button **3.** Lamp

NOTE: The timing, at which the lamp starts blinking, depends on the temperature at work place and the battery cartridge conditions.

PARTS DESCRIPTION

Country specific

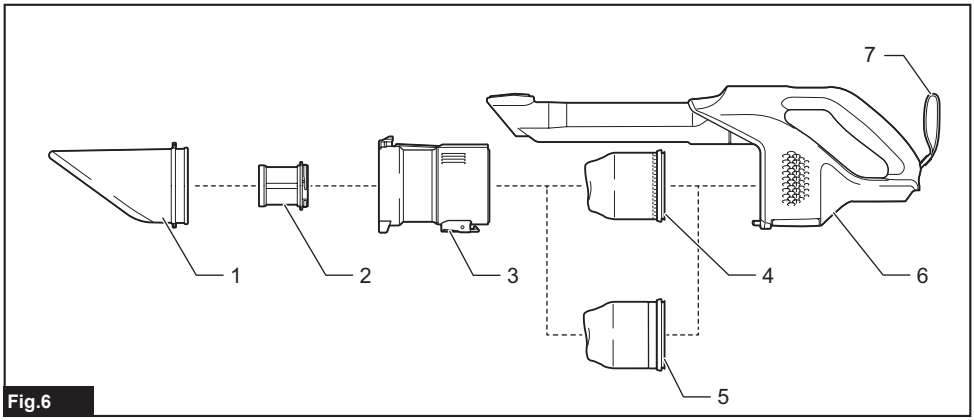

Fig.6

1	250 mL dust case	2	Mesh filter	3	Cyclone body	4	High performance filter (Filter frame in gray color) (Optional accessory)
5	HEPA filter (Filter frame in white color) (Optional accessory)	6	Cleaner body	7	Hand strap (Country specific)	-	-

ASSEMBLY

⚠***CAUTION:*** **Always be sure that the tool is switched off and the battery cartridge is removed before carrying out any work on the tool.**

⚠***CAUTION:*** **Be sure to attach filters to the cleaner properly.** Filters with holes or those not properly attached may allow dust to enter the motor housing. This may cause motor failure or fires.

⚠***CAUTION:*** **Make sure all the attachments and components are secured in place properly before use.**

Installing and removing cleaner attachments

⚠***CAUTION:*** **After installing attachments, check if they are securely installed.** If the attachments are installed imperfectly, they may come off and cause personal injury.

⚠***CAUTION:*** **Be careful not to hit your hand on the wall etc. when removing the attachments.**

⚠***CAUTION:*** **Do not carry the tool by holding the pipe or any other attachments.** These parts may detach and cause personal injury.

When using attachment with lock function

To install attachment, insert it to the suction inlet of the cleaner until it clicks. Make sure that the attachment is locked.

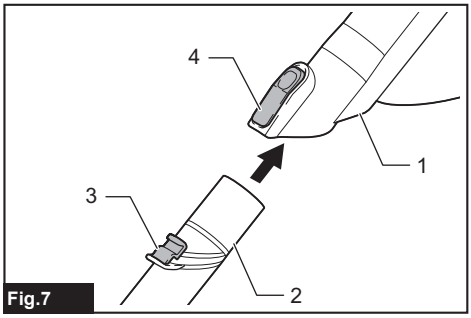

Fig.7

► **1.** Suction inlet **2.** Attachment with lock function **3.** Hook **4.** Release button

NOTICE: **When installing the attachment with lock function, be sure to align the release button on the cleaner with the hook on the attachment.** If they are not aligned, the attachment will not be locked and may come off from the cleaner.

To remove attachment, pull it off the cleaner while pressing and holding the arms of the release button.

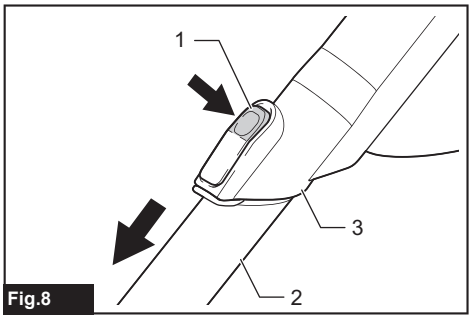

Fig.8

► **1.** Release button **2.** Attachment with lock function **3.** Suction inlet

When using attachment without lock function

To connect attachment without lock function, twist and insert it securely into the suction inlet of the cleaner. To disconnect the attachment, pull it away while twisting.

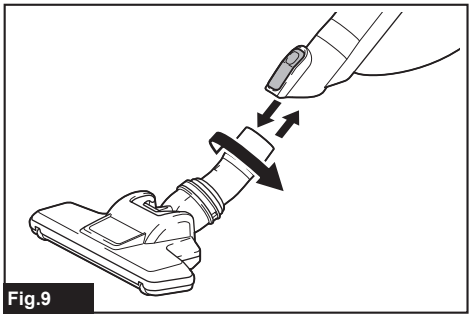
Fig.9

OPERATION

⚠***CAUTION:*** **Do not move your face close to the air vent when operating the cleaner.** If foreign objects are blown into eyes, it may result in personal injury.

NOTICE: **Avoid using the cleaner in a horizontal or upward facing position.** It may otherwise cause the mesh filter to become clogged.

NOTICE: **Always use the cleaner with filters installed.** Using the cleaner without filters may result in a motor malfunction.

NOTICE: **Empty the dust case in the cyclone unit when dust has accumulated.** Continuing use will result in weakened suction force.

The cyclone unit helps reduce the amount of dust that enters into the cleaner, enhancing the suction performance with simple and easy dust disposing.

Cleaning (Suction)

Nozzle

Attach the nozzle to clean off tables, desks, furniture, etc. The nozzle slips on easily.

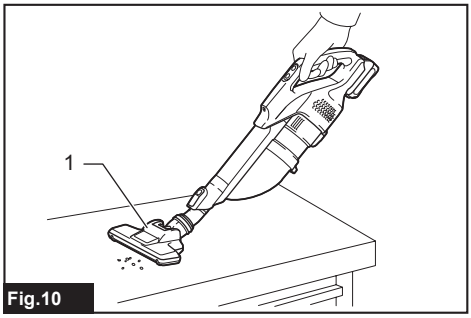

Fig.10

► **1.** Nozzle

Nozzle + Extension wand (Straight pipe)

The extension wand fits in between the nozzle and the cleaner itself. This arrangement is convenient for cleaning a floor in a standing position.

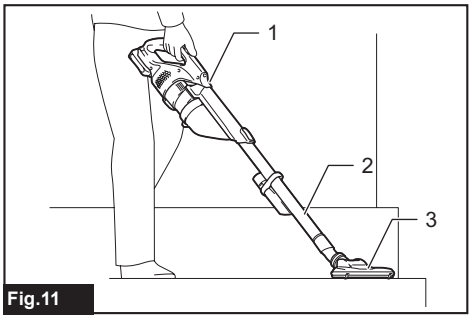

Fig.11

► **1.** Cleaner body **2.** Extension wand (Straight pipe) **3.** Nozzle

Sash nozzle

Fit on the sash nozzle for cleaning corners and crevices of a car or furniture.

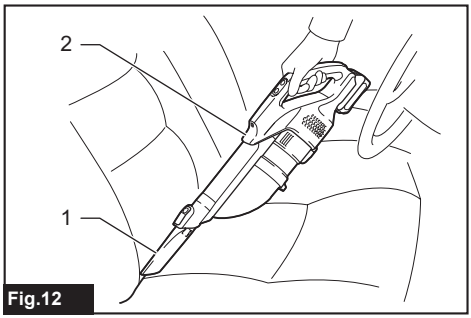

Fig.12

► **1.** Sash nozzle **2.** Cleaner body

You can store the sash nozzle in the nozzle holder.

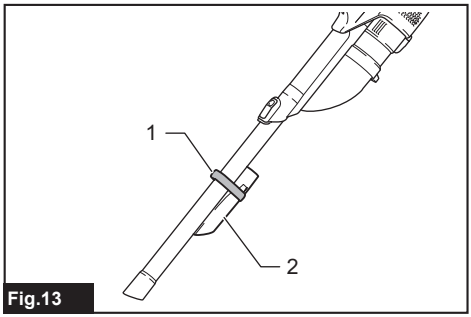

Fig.13

► **1.** Nozzle holder **2.** Sash nozzle

⚠*CAUTION:* Be careful not to trap finger(s) between the sash nozzle and the nozzle holder.
Trapping finger(s) may cause injury.

Sash nozzle + Extension wand (Straight pipe)

In tight quarters where the cleaner itself cannot squeeze in, or in high places hard to reach, use this arrangement.

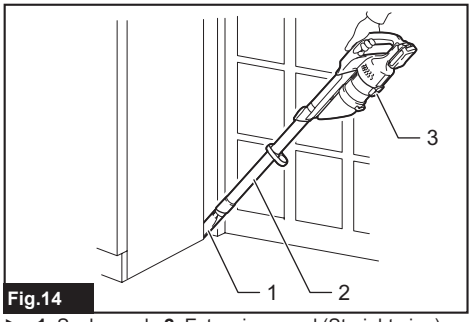

Fig.14

► **1.** Sash nozzle **2.** Extension wand (Straight pipe) **3.** Cleaner body

Cleaning without nozzle

You can pick up powder and dust without nozzle.

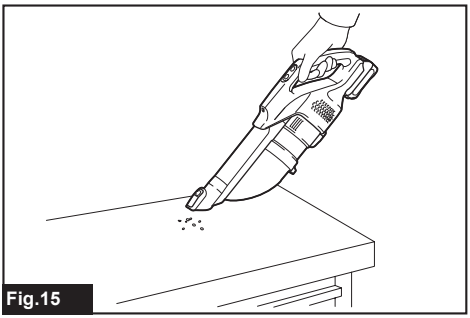
Fig.15

For picking up dust on a floor in a standing position, it is convenient to attach the extension wand to the cleaner.

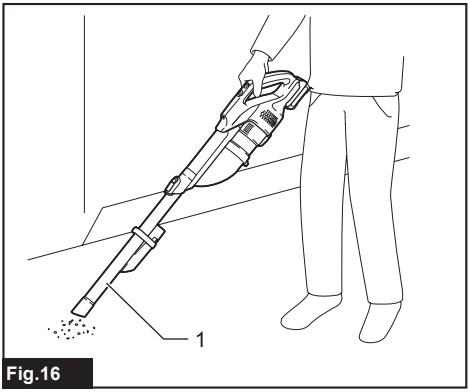

Fig.16

► **1.** Extension wand (Straight pipe)

Disposing of dust

⚠*CAUTION:* Be careful not to trap finger(s) between the dust case and cyclone body when reassembling.

⚠*CAUTION:* The dust may fly up when disposed out of the dust case. Be careful not to let the dust get into your eyes.

Dispose of accumulated dust as follows before it exceeds the dust disposal line.

1. Point the cleaner head downward and hold the dust case firmly.
Then, rotate it until the mark on the dust case aligns with the long mark, and remove the dust case.

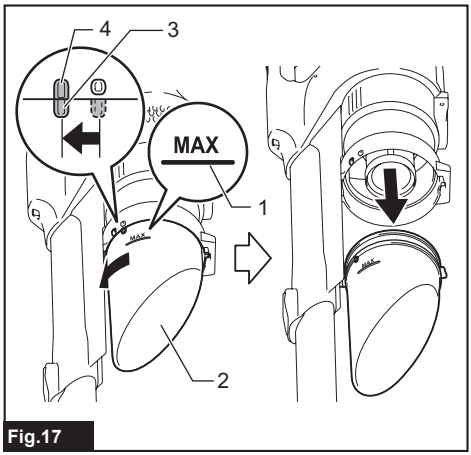

Fig.17

► **1.** Dust disposal line **2.** Dust case **3.** Mark on the dust case **4.** Long mark

2. Empty the dust case and clean the adhered dust off the mesh filter.

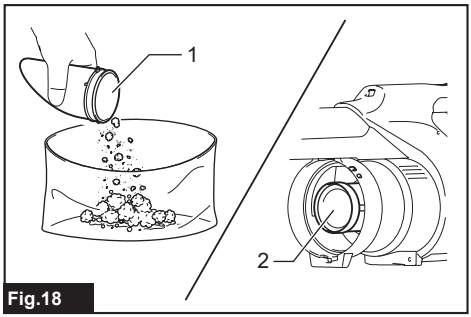

Fig.18

► **1.** Dust case **2.** Mesh filter

NOTE: Refer to MAINTENANCE section for instructions on how to clean the mesh filter.

3. Align the mark on the dust case with the long mark, and insert the dust case into position. Then, rotate it until the mark aligns with the short mark and the dust case is securely locked.
At this point, ensure that the hooks on the opening of the dust case fit properly into the grooves on the cleaner.

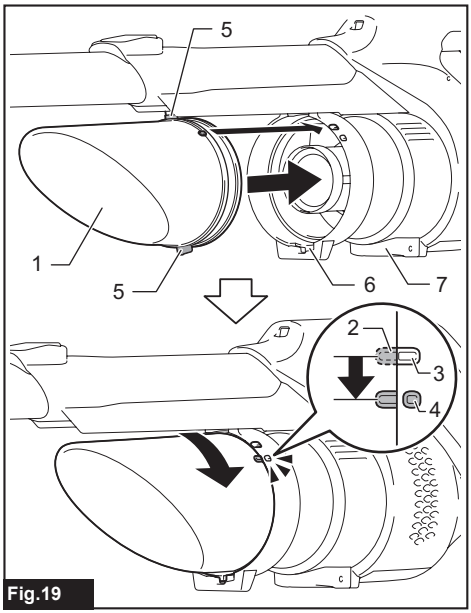

Fig.19

► **1.** Dust case **2.** Mark on the dust case **3.** Long mark **4.** Short mark **5.** Hook **6.** Groove **7.** Cyclone body

NOTICE: **Empty the dust case before it becomes too full, or the suction force weakens.**

NOTICE: **When the dust case becomes dirty, remove and wash it with water. Dry the dust case thoroughly before reassembly and use.**

NOTICE: **Make sure all the attachments and components are secured in place properly before use.**

NOTICE: **If the suction force does not recover even after disposing of the dust and cleaning the mesh filter, check whether dust has accumulated inside the cyclone body or clogging has occurred.**

NOTICE: **When attaching the dust case, make sure to install it straight to avoid any tilting.**

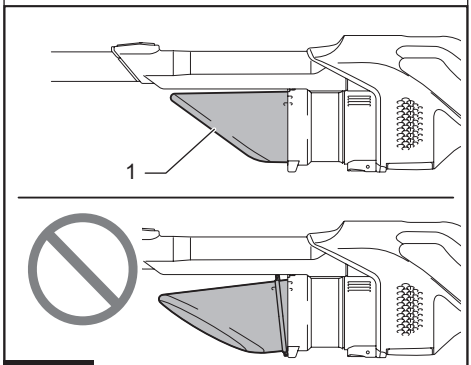

Fig.20

► **1.** Dust case

MAINTENANCE

⚠***CAUTION:*** **Always be sure that the tool is switched off and the battery cartridge is removed before attempting to perform inspection or maintenance.**

⚠***CAUTION:*** **Be sure to attach filters to the cleaner properly.** Filters with holes or those not properly attached may allow dust to enter the motor housing. This may cause motor failure or fires.

NOTICE: **Never use gasoline, benzine, thinner, alcohol or the like. Discoloration, deformation or cracks may result.**

To maintain product SAFETY and RELIABILITY, repairs, any other maintenance or adjustment should be performed by Makita Authorized or Factory Service Centers, always using Makita replacement parts.

After use

⚠***CAUTION:*** **Putting the cleaner against the wall without any other support may cause the cleaner to fall down, resulting in personal injury or damage to the cleaner.**

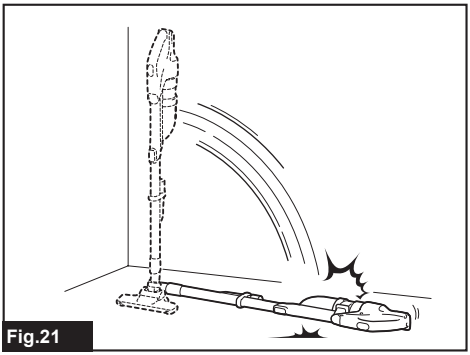

Fig.21

Regular maintenance

⚠***CAUTION:*** **Clean the filters in the cyclone unit or cleaner itself when they become clogged.** Continued use in the clogged condition may result in heating or motor malfunction.

NOTICE: **Do not blow dust sticking on the cleaner and filters by air duster.** It brings dust into the housing and causes failure.

NOTICE: **Remove any dust from the nozzle vents.** Failure to do so may cause fire or failure.

Routine maintenance is required to restore normal operating conditions.

Cleaner body

Wipe off the outside (cleaner body) of the cleaner using a cloth dampened in soapy water, and clean out the suction openings.

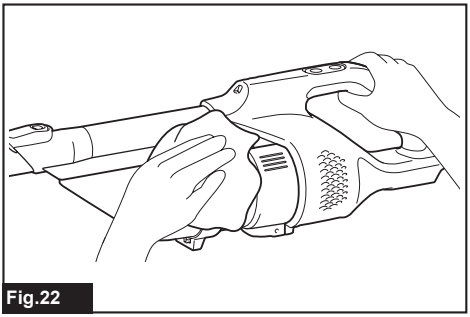

Fig.22

Cyclone unit and filters

NOTICE: **Dust off and clean out inside the cyclone unit and filters, when suction performance becomes less effective regardless of the amount of dust collected in the dust case.**

NOTICE: **After washing filters, dry them thoroughly before use.** Insufficiently dried filters may cause poor suction and shorten the service life of the motor.

NOTICE: **After cleaning the filters, be sure to re-install them before use.** If you use the cleaner without filters, dust comes into the motor housing and causes malfunction.

Cyclone unit

1. Tap the cyclone unit several times with your hand to remove dust adhering to the inner surface of the cyclone unit and filter.

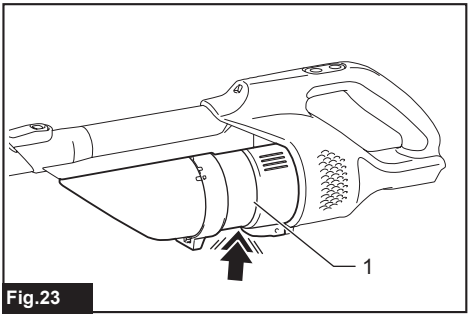

Fig.23

► **1.** Cyclone unit

2. With the suction inlet pointing downwards, hold the cyclone unit firmly, and then detach the cyclone unit from the cleaner body slowly and straightly while pressing and holding the release button on cyclone unit.

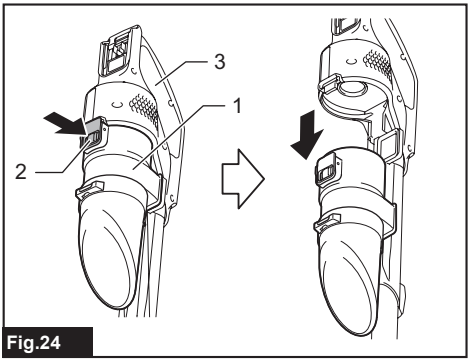

Fig.24

► **1.** Cyclone unit **2.** Release button (on the cyclone unit) **3.** Cleaner body

NOTE: Dust may fly out when the cyclone unit is disassembled. It is recommended to place a garbage bag underneath the cyclone unit.

3. Pinch the filter and pull it out from the cyclone unit.

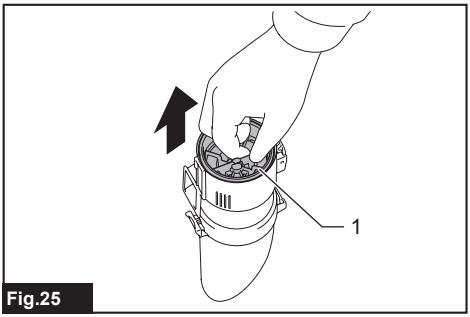

Fig.25

► **1.** Filter

NOTE: The type of filter installed at the time of shipment varies depending on your region of residence.

4. Dust off inside the cyclone unit and filter, then return the filter to the cyclone unit.

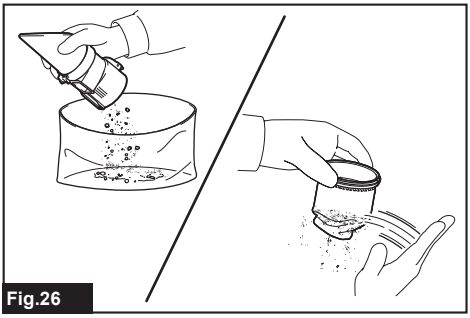

Fig.26

5. Place the cyclone unit back onto the cleaner body. Align the hook on the cyclone unit with the groove on the cleaner body. Then slide the cyclone unit back onto the cleaner body until it clicks. Make sure that the cyclone unit is locked and the hook is in the groove on the cleaner body.

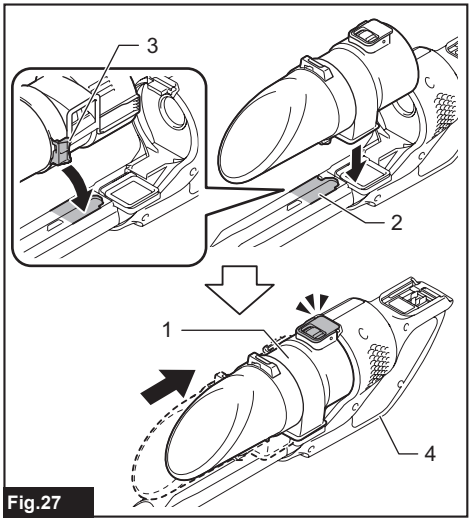

Fig.27

► **1.** Cyclone unit **2.** Groove **3.** Hook (on the cyclone unit) **4.** Cleaner body

NOTICE: **When attaching the cyclone unit, make sure to install it straight to avoid any tilting.**

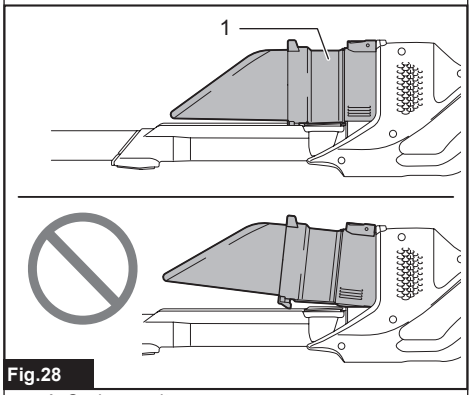

Fig.28

► **1.** Cyclone unit

High performance filter

Optional accessory

1. Disassemble the cyclone unit from the cleaner body.

2. Pinch the high performance filter and pull it out from the cyclone unit.

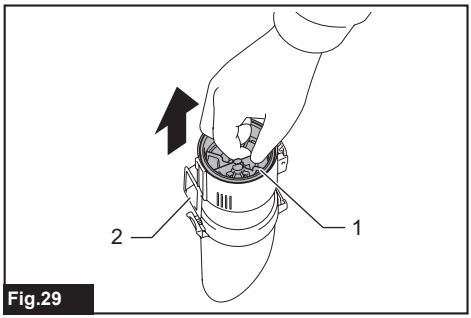

Fig.29

► **1.** High performance filter **2.** Cyclone unit

3. Wipe and shake dust off the high performance filter by hand.


Fig.30

4. Wash the high performance filter in soapy water when it is clogged with dust and dirt. Dry it out thoroughly in the shade before use.

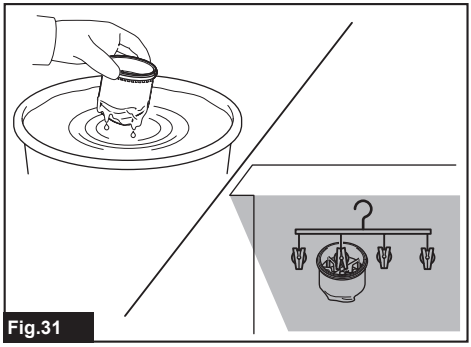
Fig.31

NOTE: Avoid fastening the attachment end (rubber sealing ring) of high performance filter when hanging it up for drying.

5. Hold the mounting end of high performance filter and squeeze it back into the cyclone unit.

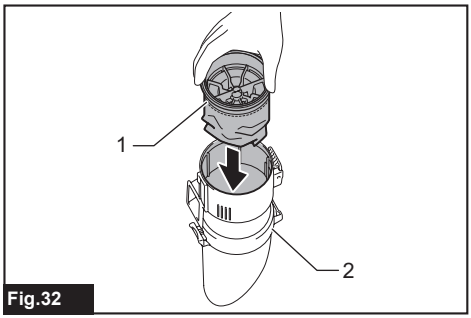

Fig.32

► **1.** High performance filter **2.** Cyclone unit

HEPA filter

Optional accessory

***NOTICE:* Do not rub or scratch the HEPA filter with hard objects such as a brush and a paddle.**

1. Disassemble the cyclone unit from the cleaner body.

2. Pinch the HEPA filter (covered with high performance prefilter) and pull it out from the cyclone unit.

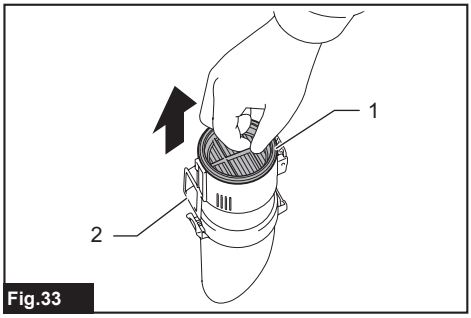

Fig.33

► **1.** HEPA filter (covered with high performance prefilter) **2.** Cyclone unit

3. Disassemble the high performance prefilter from the HEPA filter by hand twisting.

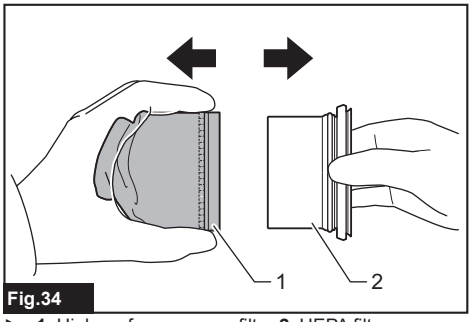

Fig.34

► **1.** High performance prefilter **2.** HEPA filter

4. Wipe and shake dust off the high performance prefilter and HEPA filter by hand.

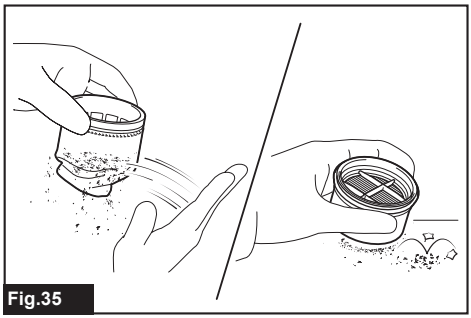

Fig.35

5. Wash the high performance prefilter and HEPA filter in soapy water. Rinse and dry them thoroughly in the shade before use.

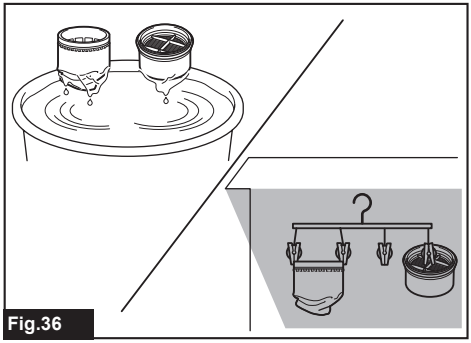

Fig.36

NOTE: Avoid fastening the attachment end (rubber sealing ring) of HEPA filter when hanging it up for drying.

6. Attach the high performance prefilter onto the HEPA filter.

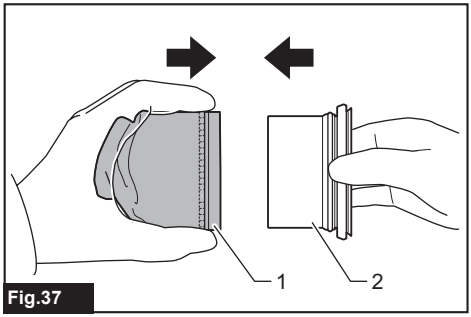

Fig.37

► **1.** High performance prefilter **2.** HEPA filter

7. Hold the mounting end of HEPA filter (covered with high performance prefilter) and squeeze it back into the cyclone unit.

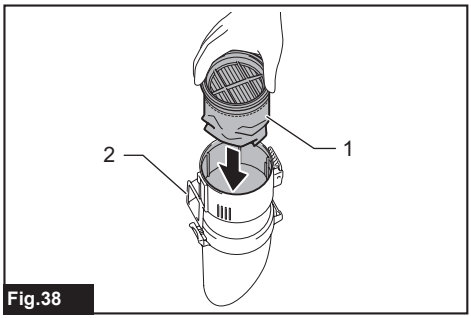

Fig.38

► **1.** HEPA filter (covered with the high performance prefilter) **2.** Cyclone unit

Condition-based maintenance

NOTICE: **Clean the mesh filter in the cyclone unit when they become clogged.** Continuing use in the clogged condition may result in heating or motor malfunction.

Deep and spot cleaning needs to be carried out according to your tool performance.

Mesh filter

Clean up the mesh filter placed in the cyclone unit when no suggested improvement on suction performance has been found after completing regular maintenance.

1. Point the cleaner head downward and hold the dust case firmly.
Then, rotate it until the mark on the dust case aligns with the long mark, and remove the dust case.

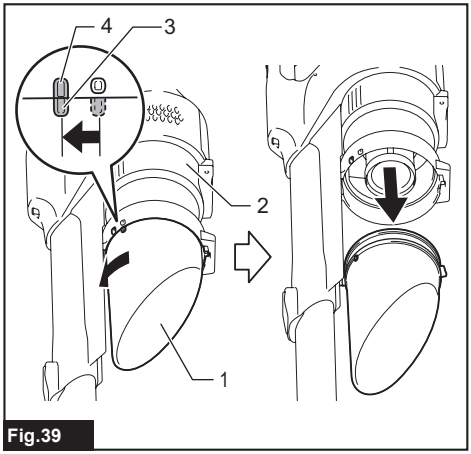

Fig.39

► **1.** Dust case **2.** Cyclone unit **3.** Mark on the dust case **4.** Long mark

2. Turn the mesh filter and align the marks on both the mesh filter and the cleaner body as shown in the figure to release the lock. Then detach it from the cyclone body.

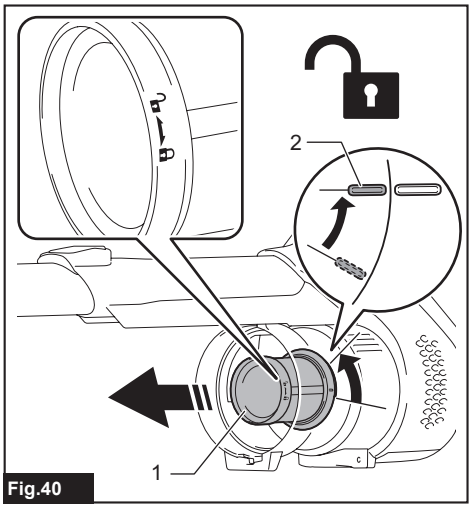

Fig.40

► **1.** Mesh filter **2.** Mark

3. Wipe and shake dust off mesh filter by hand.

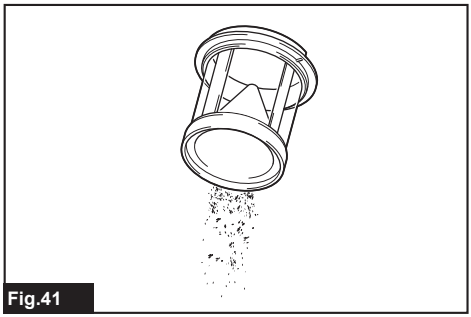

Fig.41

4. Wash the mesh filter in soapy water when it is clogged with dust and dirt. Dry it out thoroughly in the shade before use.

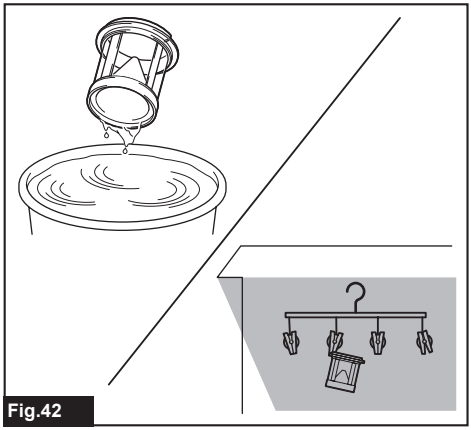

Fig.42

5. Reattach the mesh filter to the cyclone body. Align the mark on the mesh filter with that of the port and insert the mesh filter. Turn the mesh filter until locks with a click.

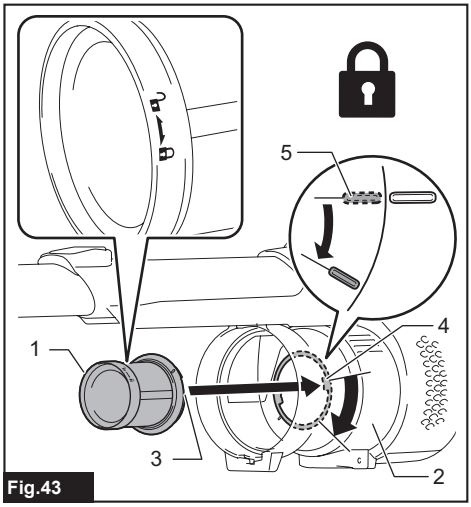

Fig.43

► **1.** Mesh filter **2.** Cyclone body **3.** Cutout **4.** Port **5.** Mark

NOTE: When inserting the mesh filter, make sure to align the cutouts on the mesh filter with the hooks on the port.

Air channels

Remove any foreign objects in the air channels that may be obstructing airflow when no suggested improvement on suction performance has been found after completing regular maintenance.

1. With the suction inlet pointing downwards, hold the cyclone unit firmly, and then detach the cyclone unit from the cleaner body slowly and straightly while pressing and holding the release button on cyclone unit.

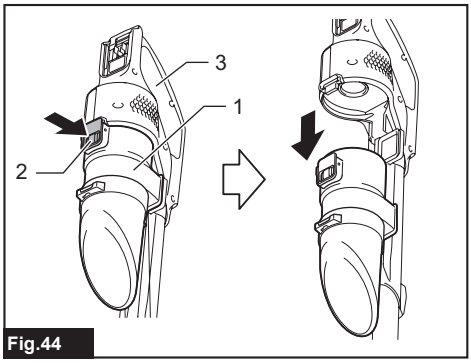

Fig.44

► **1.** Cyclone unit **2.** Release button (on the cyclone unit) **3.** Cleaner body

NOTE: Dust may fly out when the cyclone unit is disassembled. It is recommended to place a garbage bag underneath the cyclone unit.

2. Clean off any substance found in the air channels.

Foreign substance is likely to get stuck around the connection port.

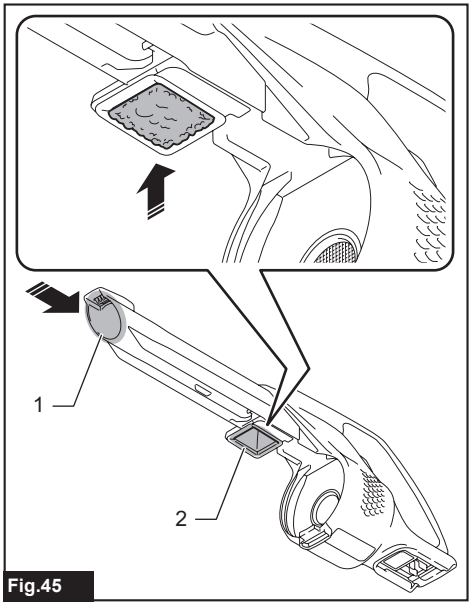

Fig.45

► **1.** Suction inlet **2.** Connection port

3. Return the cyclone unit to the cleaner body.

NOTICE: **Do not attempt to remove the inlet seal or handle it roughly.** The inlet seal attached to the connection port is designed to prevent detachment. If the inlet seal has detached accidentally, reattach it to the original position.

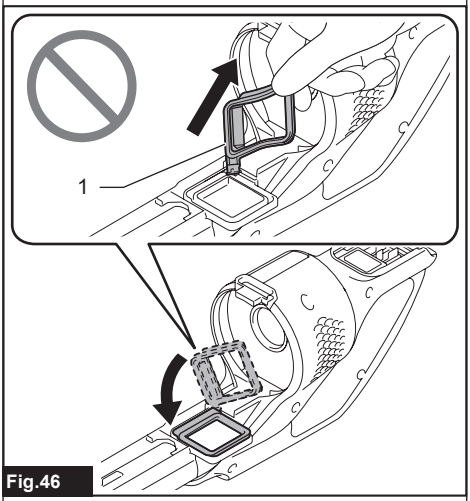

Fig.46

► **1.** Inlet seal

Troubleshooting

Before asking for repairs, check the following points.

Symptom	Area to be investigated	Fixing method
Weak suction power	Is dust case or inside cyclone unit full of dust?	Empty dust case or inside cyclone unit.
	Are filters clogged?	Dust down or wash high performance filter/HEPA filter/mesh filter.
	Anything to block incoming air channels?	Clean any dust and objects out of air openings and channels.
	Is battery cartridge discharged?	Charge battery cartridge.
Not working	Is battery cartridge discharged?	Charge battery cartridge.
Noise and vibration	Are filters clogged?	Dust down or wash high performance filter/HEPA filter/mesh filter.
	Anything to block openings or holes?	Clean any dust and objects out of nozzles, pipes and air openings.
	Is suction inlet of nozzle or pipe closed?	Uncover and open suction inlet of nozzle and pipe.

⚠***CAUTION:*** **Do not attempt to repair the cleaner by yourself.**

OPTIONAL ACCESSORIES

⚠***CAUTION:*** **These accessories or attachments are recommended for use with your Makita tool specified in this manual.** The use of any other accessories or attachments might present a risk of injury to persons. Only use accessory or attachment for its stated purpose.

If you need any assistance for more details regarding these accessories, ask your local Makita Service Center.

- Extension wand (Straight pipe)
- Nozzle
- Nozzle for carpet
- Shelf brush
- Sash nozzle
- Round brush
- Flexible hose
- High performance filter
- HEPA filter
- Seat nozzle
- Crevice nozzle
- Tool bag
- Makita genuine battery and charger

NOTE: Some items in the list may be included in the tool package as standard accessories. They may differ from country to country.

Makita Europe N.V.

Jan-Baptist Vinkstraat 2, 3070 Kortenberg, Belgium

Makita Corporation

3-11-8, Sumiyoshi-cho, Anjo, Aichi 446-8502 Japan

www.makita.com



885B38A222
EN
20251030