Model No. DGA701 180MM CORDLESS ANGLE GRINDER

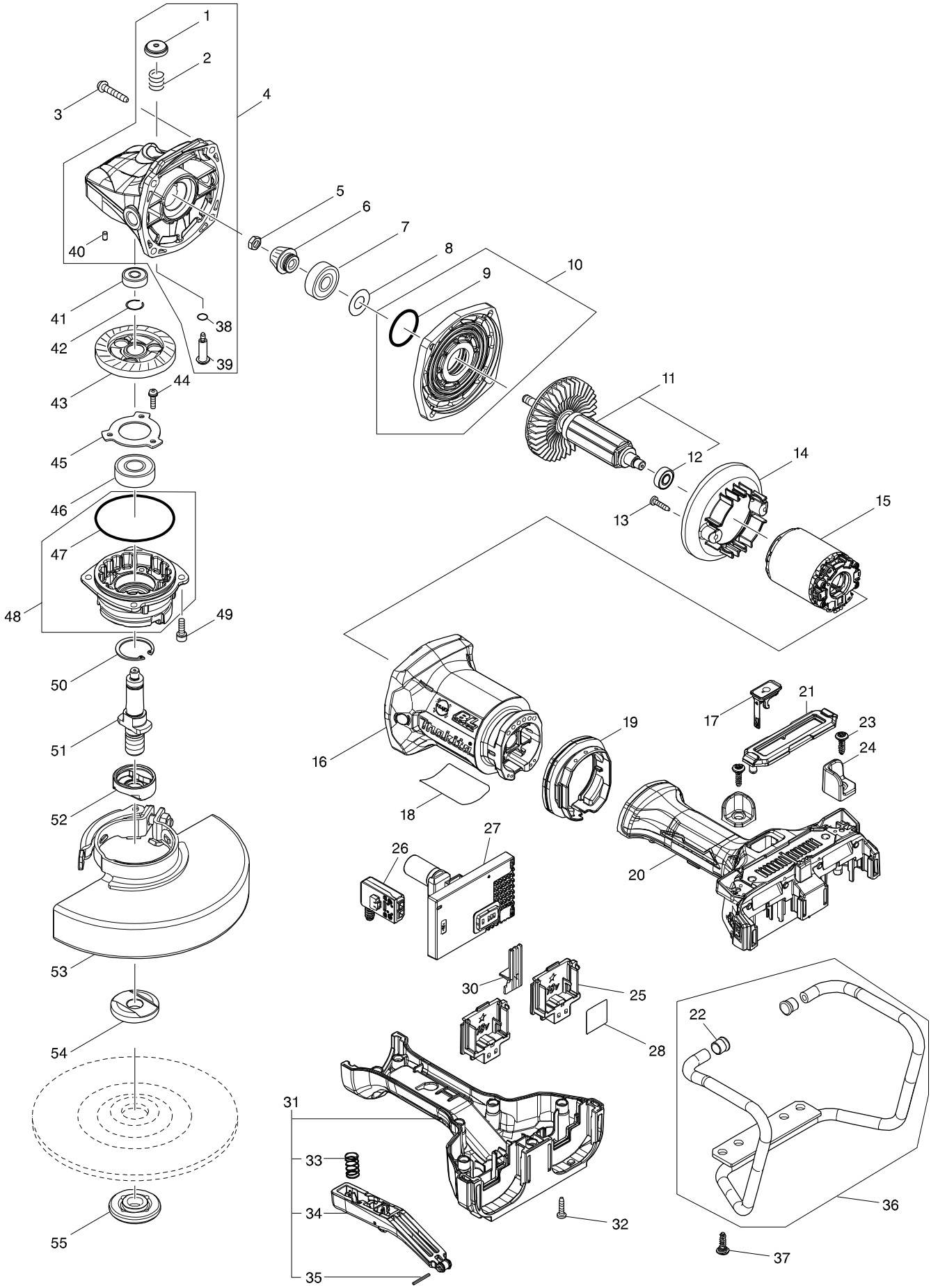

Model No. DGA701 180MM CORDLESS ANGLE GRINDER

Item	Parts No.	Description	I/C	Qty	N/O	Opt. 1	Opt. 2	Note
001	451485-7	PIN CAP		1				
002	233089-5	COMPRESSION SPRING 12		1				
003	266173-1	TAPPING SCREW 5X30		4				
004	135918-7	GEAR HOUSING ASS'Y		1				
D10		INC. 1,2,38-40						
005	264010-3	HEX.NUT M7		1				
006	227564-1	SPIRAL BEVEL GEAR 10A		1				
007	211137-0	BALL BEARING 6201LLU		1				
008	253759-0	FLAT WASHER 12		1				
009	213459-4	O RING 32		1				
010	135916-1	GEAR HOUSING COVER ASS'Y		1				
D10		INC. 9						
011	519436-7	ROTOR ASS'Y		1	*			
D10		INC. 12			*			
011-1	519436-7	ROTOR ASS'Y	O	1				
D10		INC. 12						
012	211166-3	BALL BEARING 698DDW		1				
013	266326-2	TAPPING SCREW 4X18		2				
014	457618-2	BAFFLE PLATE		1				
015	629376-2	STATOR		1				
016	457615-8	MOTOR HOUSING		1				
017	140F99-0	CAP COMPLETE		1				
C10	213218-6	O RING 16		1				
C20	818H07-8	CAP LABEL		1				
018	854U75-5	DGA701 NAME PLATE		1				
019	457619-0	VIBRATION PROOF RUBBER		1				
020	136022-5	HANDLE SWITCH LEVER ASS'Y		1				
C10	263005-3	RUBBER PIN 6		4				
D10		INC. 31,33-35						
021	457620-5	DUST COVER		1				
022	422230-7	CAP		2				
023	251587-7	H.L.TAPPING SCREW 5X18		2				
024	327048-0	PROTECTION BLOCK		2	*			
024-1	347482-8	PROTECTION BLOCK	O	2				
025	644809-6	TERMINAL		2				
026	651083-9	SWITCH C3XA-1PSPM		1				
027	620987-6	CONTROLLER COMPLETE		1				
C10	801H41-5	INDICATION LABEL		1				
028	854U82-8	DGA701 SERIAL NO. LABEL		1				
030	457621-3	LENS		1				
031	136022-5	HANDLE SWITCH LEVER ASS'Y		1				
C10	263005-3	RUBBER PIN 6		4				
D10		INC. 20,33-35						
032	265999-8	TAPPING SCREW 4X25		7				
033	234357-9	COMPRESSION SPRING 11		1				
034	144584-9	SWITCH LEVER COMPLETE		1				
035	951019-1	SPRING PIN 2-20		1				
036	135919-5	GUARD PIPE ASS'Y		1				

Model No. DGA701 180MM CORDLESS ANGLE GRINDER

Item	Parts No.	Description	I/C	Qty	N/O	Opt. 1	Opt. 2	Note
D10		INC. 22						
037	251587-7	H.L.TAPPING SCREW 5X18		4				
038	213026-5	O RING 7		1				
039	256516-5	SHOULDER PIN 11		1				
040	263002-9	RUBBER PIN 4		1				
041	210029-0	BALL BEARING 608ZZ		1				
042	233925-5	RING SPRING 13		1				
043	227562-5	SPIRAL BEVEL GEAR 38		1				
044	911128-8	P.H.SCREW M4X16 WITH WR		3				
045	285851-4	BEARING RETAINER		1				
046	211241-5	BALL BEARING 6202DDW		1				
047	213720-9	O RING 67		1				
048	135917-9	BEARING BOX ASS'Y		1				
D10		INC. 47						
049	922221-3	HEX. SOCKET HEAD BOLT M5X16		4				
050	962151-6	RETAINING RING R-32		1				
051	326963-5	SPINDLE		1				
052	310800-3	LEAD FLANGE		1				
053	122846-5	TOOLLESS WHEEL COVER 180K		1				
054	224447-6	INNER FLANGE 42B		1				
055	224485-8	LOCK NUT 14-45		1				
A01	143486-6	GRIP 37 COMPLETE		1				
A02	782407-9	LOCK NUT WRENCH 35		1				
A03	199393-1	WIRELESS UNIT SET		1				
E01	818L56-9	CAUTION LABEL		1				