Model No.DRV250 CORDLESS RIVET GUN

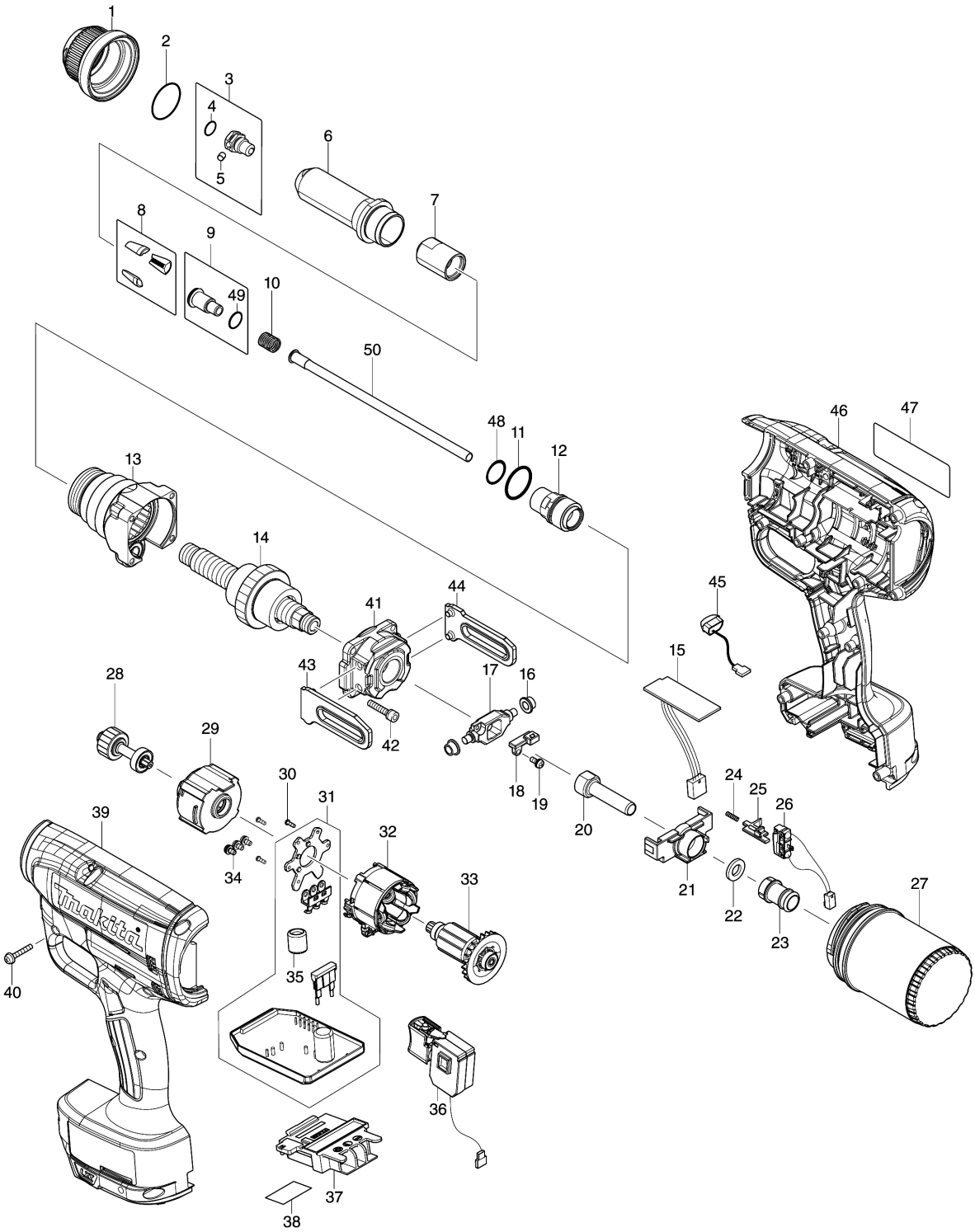

Model No.DRV250 CORDLESS RIVET GUN

分解圖號	零件編號	品名	交換	數量	New/Old	選擇1	選擇2	註記
001	319774–5	SCREW NUT 6.4		1				
002	213380–7	圈24		1				
003	127223–6	NOSEPIECE 6.4 ASSEMBLY		1				
D10		INC. 4,5						
004	213011–8	O圈 7 F/LS1212		1				
005	256217–5	销子4		1				
006	327279–1	HEAD 6.4		1				
007	327281–4	JAW CASE		1				
008	199730–9	JAW 6.4 SET		1				
009	127473–3	JAW PUSHER 4.5 ASSEMBLY		1				
D10		INC. 49						
010	232586–8	COMPRESSION SPRING 7		1				
011	213265–7	O形圈 17		1				
012	327280–6	JOINT 6.4		1				
013	140E32–6	FRONT HOUSING COMPLETE		1				
014	127050–1	BALL SCREW		1				
015	620958–3	HALL IC CIRCUIT		1				
016	257457–8	RING 5		2				
017	310907–5	ROLLER SHAFT 6.4		1				
018	140E40–7	MAGNET HOLDER COMPLETE		1	*			
018–1	140T04–1	MAGNET HOLDER COMPLETE	<	1				
019	911008–8	PAN HEAD SCREW M3X8		1				
020	327202–6	TUBE		1				
021	458772–5	TUBE GUIDE A		1				
022	261161–3	FELT RING 8		1				
023	458773–3	TUBE GUIDE B		1				
024	233025–1	壓縮彈簧 2		1				
025	458774–1	SWITCH LEVER		1				
026	632M90–9	SWITCH UNIT		1				
027	162500–9	MANDREL CONTAINER COMPLETE		1				
028	140E31–8	SPUR GEAR 10 COMPLETE		1				
029	127051–9	GEAR ASSEMBLY		1				
030	266490–9	盤頭螺絲 PT 2X6		3				
031	632P81–8	CONTROLLER UNIT		1				
032	629373–8	STATOR		1				
033	619535–6	ROTOR		1				
034	652069–6	平頭螺絲M3X6		3				

Please order the parts with part number.

Print Date 17/10/2019

Model No.DRV250 CORDLESS RIVET GUN

分解圖號	零件編號	品名	交換	數量	New/Old	選擇1	選擇2	註記
035	688164-6	濾波器		1				
036	651379-8	SWITCH C3JW-1A-S		1				
037	643874-2	端子座		1				
038	855M30-2	DRV250 SERIAL NO. LABEL		1				
039	183L30-9	HOUSING SET		1				
C10	263005-3	橡皮銷 6		2				
C20	252126-6	六角鎖定螺母M4-7		2				
C30	931002-4	HEX. NUT M3		10				
D10		INC. 46						
040	265095-2	螺絲 M3X20		10				
041	140E33-4	REAR HOUSING COMPLETE		1				
042	265490-6	H.S.H螺絲 M4X16		4				
043	310908-3	GUIDE PLATE L		1	*			
043-1	313297-5	GUIDE PLATE L	<	1				
044	310909-1	GUIDE PLATE R		1	*			
044-1	313298-3	GUIDE PLATE R	<	1				
045	620549-0	本體外殼組		1				
046	183L30-9	HOUSING SET		1				
C10	263005-3	橡皮銷 6		2				
C20	252126-6	六角鎖定螺母M4-7		2				
C30	931002-4	HEX. NUT M3		10				
D10		INC. 39						
047	855M22-1	DRV250 NAME PLATE		1				
048	213891-2	O RING 14.5		1				
049	213054-0	O圈 9 F/HM1302		1				
050	162743-3	PIPE 4.6 COMPLETE		1				
A01	251314-2	螺絲 M4X12		1				
A02	346317-0	掛勾(大)		1				
A03	191C03-4	ACCESSORY SET B FOR 4.8		1				
C10	213011-8	O圈 7 F/LS1212		1				
C20	256217-5	销子4		1				
C30	213054-0	O圈 9 F/HM1302		1				
A04	199725-2	ACCESSORY SET FOR 6.0		1				
C10	213011-8	O圈 7 F/LS1212		1				
C20	256217-5	销子4		1				
C30	213054-0	O圈 9 F/HM1302		1				
A06	191D57-7	GREASE SET		1				

Please order the parts with part number.

Print Date 17/10/2019