| HK | HONG KONG |
|---|---|

# Diagram / Parts List

## DTL302

## CORDLESS ANGLE IMPACT WRENCH




2025/08

# (HK) DTL302 / CORDLESS ANGLE IMPACT WRENCH

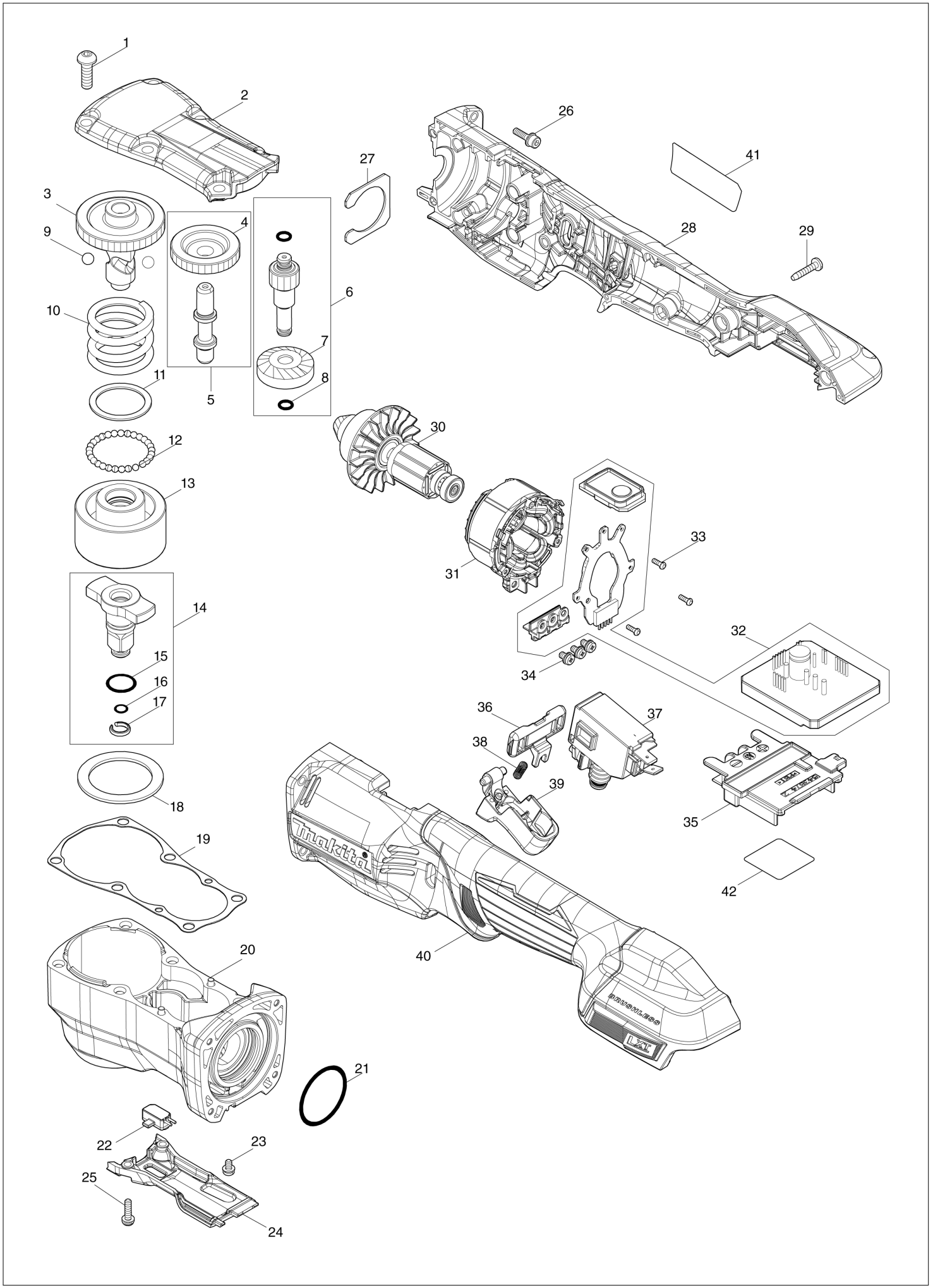

# HK HONG KONG

## DTL302 / CORDLESS ANGLE IMPACT WRENCH

| Item | Sub | Parts No. | Parts Description | Qty | I/C | E/C No. | Close No. | Remark |
|---|---|---|---|---|---|---|---|---|
| 001 | | 265E34-2 | HEX.SOCKETBUTTONHEADBOLTM5X1 | 6 | | | | |
| 002 | | 1411P3-4 | HEAD COVER COMPLETE | 1 | | | | |
| 003 | | 327F38-9 | SPINDLE | 1 | | | | |
| 004 | | 227C28-3 | SPUR GEAR 20 | 1 | | | | |
| 005 | | 137357-7 | SPINDLE B ASS'Y | 1 | | | | |
| | D10 | | INC. 4 | | | | | |
| 006 | | 137356-9 | SPINDLE A ASS'Y | 1 | | | | |
| | D10 | | INC. 7,8 | | | | | |
| 007 | | 227C25-9 | SPIRAL BEVEL GEAR 26 | 1 | | | | |
| 008 | | 213021-5 | O RING 5 | 2 | | | | |
| 009 | | 216011-7 | STEEL BALL 5.6 | 2 | | | | |
| 010 | | 232615-7 | COMPRESSION SPRING 25 | 1 | | | | |
| 011 | | 267175-0 | FLAT WASHER 24 | 1 | | | | |
| 012 | | 216019-1 | STEEL BALL 3 | 29 | | | | |
| 013 | | 327F39-7 | HAMMER | 1 | | | | |
| 014 | | 137379-7 | ANVIL ASS'Y | 1 | | | | |
| | D10 | | INC. 15-17 | | | | | |
| 015 | | 213118-0 | O RING 12 | 1 | | | | |
| 016 | | 213960-9 | O RING 5 | 1 | | | | |
| 017 | | 233943-3 | RING SPRING 8 | 1 | | | | |
| 018 | | 267354-0 | FLAT WASHER 31 | 1 | | | | |
| 019 | | 422C56-5 | GASKET | 1 | | | | |
| 020 | | 1411P5-0 | ANGLE HEAD COMPLETE | 1 | | | Y09657 | |
| 020-1 | | 137403-6 | ANGLE HEAD ASS'Y | 1 | X | Y09657 | | |
| | D10 | | INC. 21 | | | Y09657 | | |
| 021 | | 213437-4 | O RING 28 | 1 | | | | |
| 022 | | 620S46-0 | LED CIRCUIT | 1 | | | | |
| 023 | | 652069-6 | FLAT HEAD SCREW M3X6 | 1 | | | | |
| 024 | | 4132X5-5 | COVER | 1 | | | | |
| 025 | | 266816-5 | + PAN HEAD SCREW M3X12 WITH WR | 2 | | | | |
| 026 | | 251510-2 | H. S. HEAD BOLT M3X12 WITH WRM | 4 | | | | |
| 027 | | 347D88-6 | PLATE | 1 | | | | |
| 028 | | 1831M9-5 | HOUSING SET | 1 | | | | |
| | C10 | 263005-3 | RUBBER PIN 6 | 2 | | | | |
| | D10 | | INC. 40 | | | | | |
| 029 | | 266429-2 | TAPPING SCREW 3X16 | 8 | | | | |
| 030 | | 619906-7 | ROTOR | 1 | | | | |
| 031 | | 629D61-1 | STATOR | 1 | | | | |
| 032 | | 620S54-1 | CONTROLLER COMPLETE | 1 | | | | |
| 033 | | 266490-9 | TAPPING SCREW PT 2X6 | 3 | | | | |
| 034 | | 652069-6 | FLAT HEAD SCREW M3X6 | 3 | | | | |
| 035 | | 643874-2 | TERMINAL | 1 | | | | |
| 036 | | 457469-3 | F/R CHANGE LEVER | 1 | | | | |
| 037 | | 650075-5 | SWITCH C3JW-6B-PA-8 | 1 | | | | |
| 038 | | 231433-0 | COMPRESSION SPRING 4 | 1 | | | | |
| 039 | | 4132W2-4 | SWITCH LEVER | 1 | | | | |
| 040 | | 1831M9-5 | HOUSING SET | 1 | | | | |
| | C10 | 263005-3 | RUBBER PIN 6 | 2 | | | | |
| | D10 | | INC. 28 | | | | | |
| 041 | | 8151T4-3 | DTL302 NAME PLATE | 1 | | | | |
| 042 | | 8151T8-5 | DTL302 SERIAL NO. LABEL | 1 | | | | |

Z:DTL302Z(N)

Interchange
O : Yes
X : No
< : the new part can be substituted for the current.
> : the current part can be substituted for the new.
S : Interchangeable as a set.