HK	HONG KONG

Diagram / Parts List

DUP181

CORDLESS PRUNING SHEARS



2025/10

(HK) DUP181 / CORDLESS PRUNING SHEARS

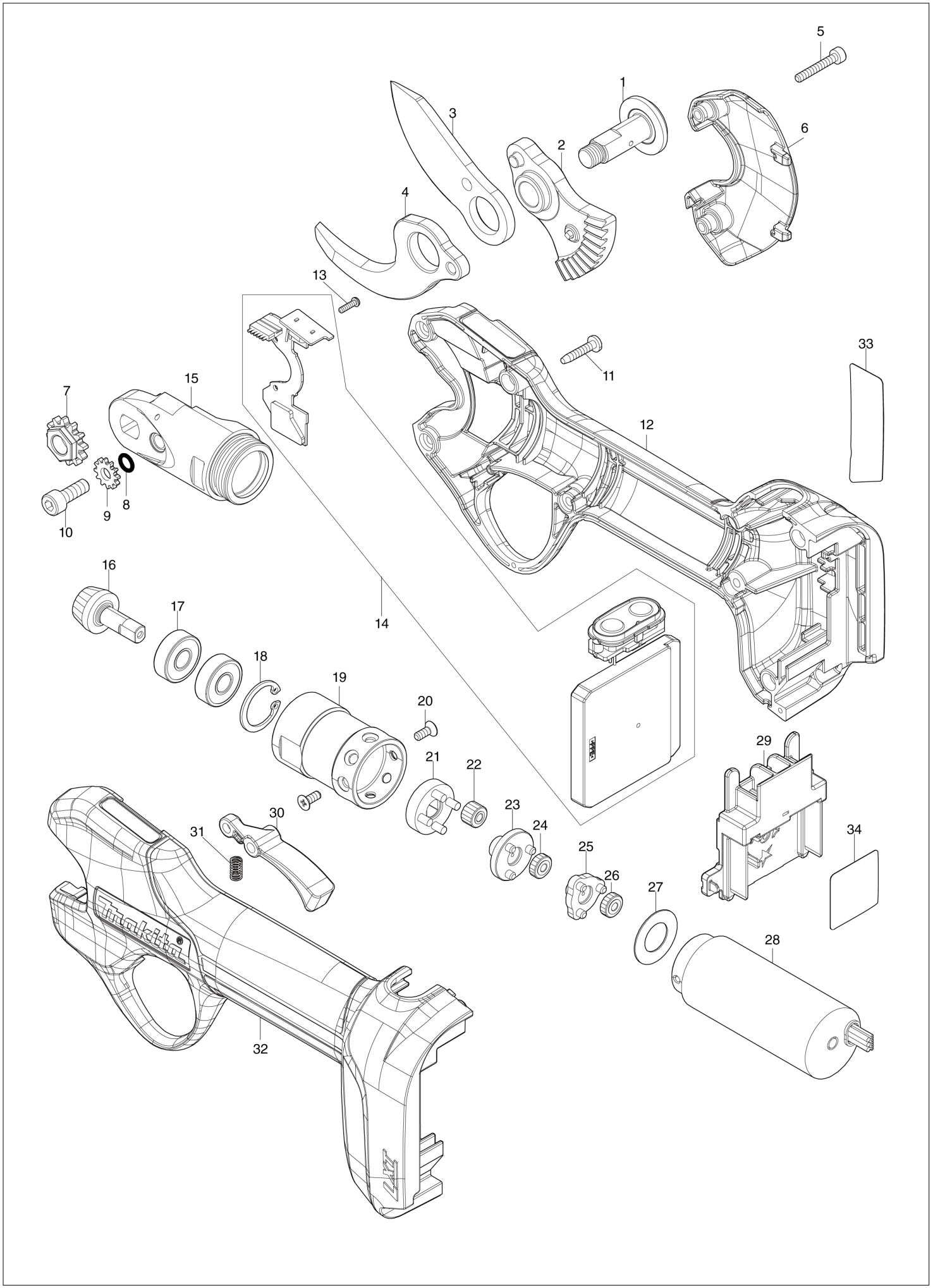

HK HONG KONG

DUP181 / CORDLESS PRUNING SHEARS

Item	Sub	Parts No.	Parts Description	Qty	I/C	E/C No.	Close No.	Remark
001		1412C5-5	SHOULDER SCREW M8 COMPLETE	1				
002		1412C4-7	BLADE HOLDER COMPLETE	1				
003		1832B2-8	SHEAR BLADE U SET	1		Y09662		
004		1832B1-0	SHEAR BLADE L SET	1		Y09662		
005		265633-0	HEX SOCKET HEAD BOLT M3X20	2				
006		1412C8-9	HOUSING COVER COMPLETE	1				
	C10	8065E8-5	CAUTION LABEL	1				
007		252360-8	HEX. NUT M8	1				
008		213021-5	O RING 5	1				
009		347E21-4	LOCK PLATE	1				
010		265D07-9	HEX.SOCKET HEAD BOLT M5X14	1				
011		266130-9	TAPPING SCREW BIND PT 3X16	6				
012		1831X3-4	HOUSING SET	1				
	C10	263005-3	RUBBER PIN 6	2				
	C20	8065E6-9	INDICATION LABEL	1				
	C30	8065E7-7	INDICATION LABEL	1				
	D10		INC. 32					
013		265D05-3	PAN HEAD SCREW M2X8	2				
014		620S81-8	CONTROLLER COMPLETE	1				
015		327F92-3	GEAR HOUSING	1				
016		227C40-3	ZEROL BEVEL GEAR 9	1				
017		210017-7	BALL BEARING 607DDW	2				
018		962059-4	RETAINING RING (INT) R-19	1				
019		227C41-1	INTERNAL GEAR 43	1				
020		912007-3	C.H.SCREW M3X8	2				
021		1412B6-6	SUPPORTER COMPLETE	1				
022		227C44-5	SPUR GEAR 14	4				
023		141S57-7	SPUR GEAR 13 COMPLETE	1				
024		227C43-7	SPUR GEAR 15	3				
025		141S56-9	SPUR GEAR 11 B COMPLETE	1				
026		227C43-7	SPUR GEAR 15	3				
027		253084-9	FLAT WASHER 12	1				
028		629D39-4	DC MOTOR	1				
029		643874-2	TERMINAL	1				
030		1412F3-0	TRIGGER COMPLETE	1				
031		232765-8	COMPRESSION SPRING 3	1				
032		1831X3-4	HOUSING SET	1				
	C10	263005-3	RUBBER PIN 6	2				
	C20	8065E6-9	INDICATION LABEL	1				
	C30	8065E7-7	INDICATION LABEL	1				
	D10		INC. 12					
033		8152J3-1	DUP181 NAME PLATE	1				
034		8152J5-7	DUP181 SERIAL NO. LABEL	1				
A01		1412W2-1	BLADE COVER COMPLETE B	1				
	C10	8095H2-7	CAUTION LABEL	1				
A02		782212-4	SOCKET WRENCH 13	1				
A03		783202-0	HEX. WRENCH 4	1				
A04		783208-8	HEX. WRENCH 2.5	1				

Z:DUP181Z(N)

Interchange
O : Yes
X : No
< : the new part can be substituted for the current.
> : the current part can be substituted for the new.
S : Interchangeable as a set.