HK	HONG KONG

Diagram / Parts List

EN425MP

GROUND TRIMMER ATTACHMENT



2025/12

(HK) EN425MP / GROUND TRIMMER ATTACHMENT

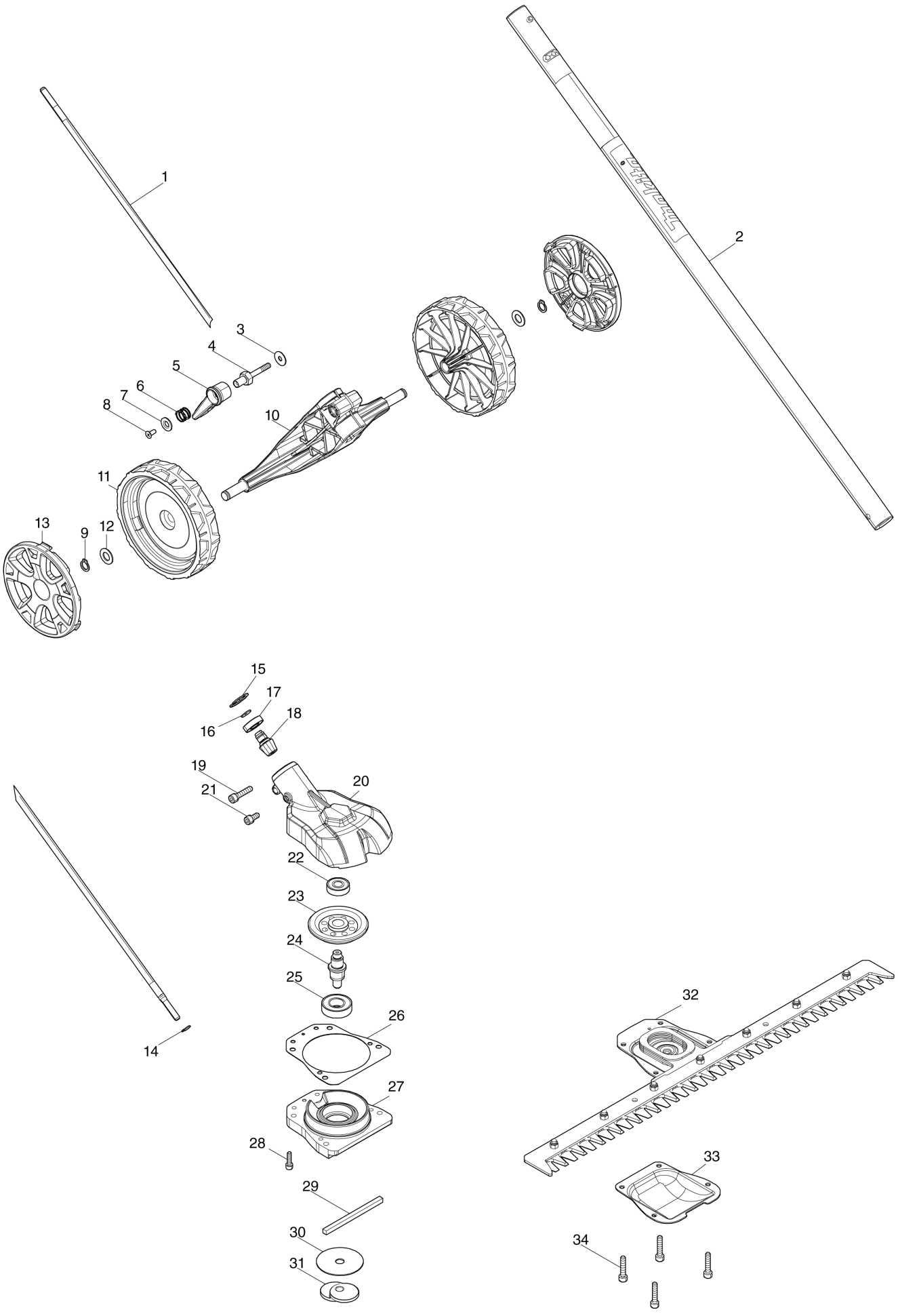

HK HONG KONG

EN425MP / GROUND TRIMMER ATTACHMENT

Item	Sub	Parts No.	Parts Description	Qty	I/C	E/C No.	Close No.	Remark
001		326798-4	SHAFT A	1				
002		1412D0-2	SHAFT PIPE COMPLETE A	1				
	C10	8096E8-0	CAUTION LABEL	1				
003		253047-5	FLAT WASHER 6	1				
004		265E61-9	HEX.BOLT M5X32	1				
005		271477-8	LEVER 53	1				
006		234347-2	COMPRESSION SPRING 11	1				
007		347577-7	WASHER 6	1				
008		265135-6	+ COUNTERSUNK HEAD SCREW M4X1	1				
009		961006-2	RETAINING RING S-10	2				
010		4133U0-0	WHEEL HOLDER 300	1				
011		413D96-0	WHEEL 130	2				
012		253828-7	FLAT WASHER 10	2				
013		4133U1-8	CAP	2				
014		961003-8	RETAINING RING S-7	1				
015		962102-9	RETAINING RING R-22	1				
016		961036-3	RETAINING RING WR-10	1				
017		210167-8	BALL BEARING 6900LLB	1				
018		227A88-3	SPIRAL BEVEL GEAR 11	1				
019		922241-7	HEX. SOCKET HEAD BOLT M5X25	1				
020		141S15-3	GEAR HOUSING COMPLETE	1				
021		922211-6	H.S.H.BOLT M5X12 WITH W	1				
022		211493-8	BALL BEARING 609DDW	1				
023		227A89-1	SPIRAL BEVEL GEAR 52	1				
024		327C06-4	SPINDLE	1				
025		211247-3	BALL BEARING 6002DDW	1				
026		422A36-9	GASKET	1				
027		141S16-1	GEAR HOUSING COVER COMPLETE	1				
028		922126-7	HEX. SOCKET HEAD BOLT M4X16	4				
029		422A37-7	DUST GUARD	1				
030		347B34-7	FRICTION PLATE U	1				
031		327C07-2	CRANK	1				
032		1916X3-0	SHEAR BLADE 500 SET	1				
	C10	252331-5	HEX. LOCK NUT M5-8	7				
	C20	257A04-1	SLEEVE 5	7				
	C30	257A05-9	RING 8	7				
	C40	265E60-1	+TRUSS HEAD SCREW M5X16	7				
	C50	199450-5	GREASE VESSEL SET	1				
033		347B49-4	UNDER PLATE	1				
034		265D17-6	H.S.H.BOLT M5X25	4				
A01		4133V1-5	BLADE COVER 500	1				
A02		422A15-7	CAP 24	1				
A03		424434-7	CAP 24	2				
A04		783202-0	HEX. WRENCH 4	1				
F01		1912V6-6	SHEAR BLADE 330 SET	1				
F02		1916X3-0	SHEAR BLADE 500 SET	1				

Z:

Interchange
O : Yes
X : No
< : the new part can be substituted for the current.
> : the current part can be substituted for the new.
S : Interchangeable as a set.