Model No.EY401MP POLE SAW ATTACHMENT

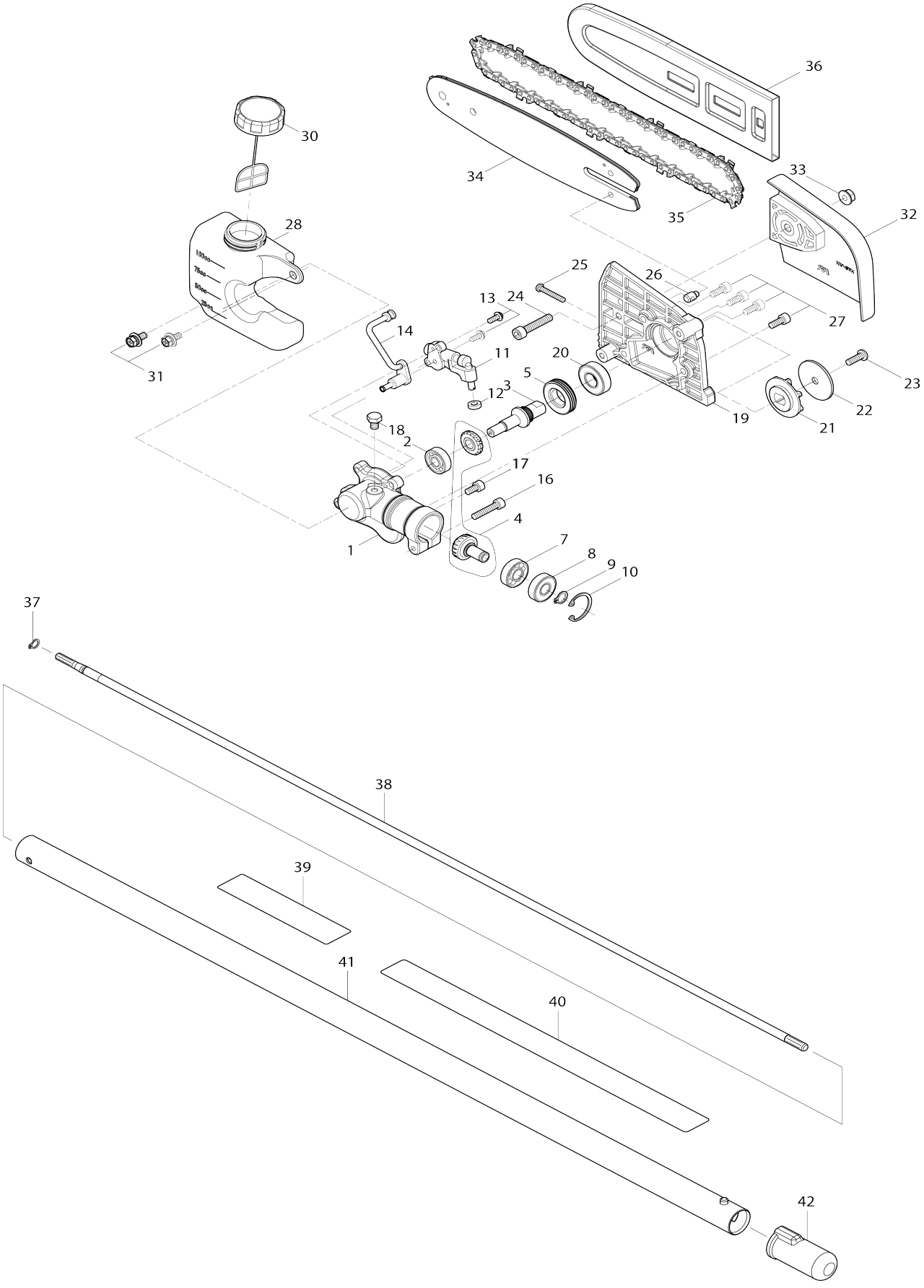

Model No.EY401MP POLE SAW ATTACHMENT

圖片編號	零件編號	型號名稱	兼容性	使用次數	新舊代碼	項目註釋1	項目註釋2
001	XTM0000001	GEAR CASE A		1	*		
001-1	XTM0000029	GEAR CASE A	O	1			
002	XTM0000002	BALL BEARING 608		1			
003	XTM0000003	GEAR SHAFT		1	*		
003-1	XTM0000024	GEAR SHAFT	<	1	*		
003-2	XTM0000030	GEAR SHAFT	S	1			
004	XTM0000004	BEVEL GEAR SET		1			
005	XTM0000005	WORM WHEEL		1			
007	XTM0000006	BALL BEARING 609		1			
008	XTM0000007	BALL BEARING 609Z		1			
009	961005-4	擋圈S-9 (10個)		1			
010	962103-7	RETAINING RING R-24		1			
011	XTM0000008	OIL PUMP		1	*		
011-1	XTM0000025	OIL PUMP	<	1			
012	XTM0000009	SEAL		1			
013	911111-5	盤頭螺絲M4X10		2			
014	XTM0000010	OIL PIPE ASS'Y		1			
016	922242-5	HEX. SOCKET HEAD BOLT M5X25		1			
017	922207-7	HEX. SOCKET HEAD BOLT M5X10		1			
018	XTM0000011	HB BOLT 6X8		1			
019	XTM0000012	GEAR CASE B		1	*		
019-1	XTM0000026	GEAR CASE B	<	1	*		
019-2	XTM0000027	GEAR CASE B	<	1			
020	XTM0000013	BALL BEARING 6001DDW		1			
021	XTM0000014	SPROCKET		1			
022	XTM0000015	SPEOCKET WASHER		1	*		
022-1	XTM0000031	SPROCKET WASHER	S	1			
023	XTM0000016	內六角頭螺栓M6X15 - EY401MP		1	*		
023-1	XTM0000032	E RING	S	1			
024	922352-8	HEX. SOCKET HEAD BOLT M6X30		1			
025	XTM0000017	調節器螺絲 - EY401MP		1	*		
025-1	XTM0000017	調節器螺絲 - EY401MP	O	1			
026	XTM0000018	調節器 - EY401MP		1			
027	922212-4	內六角頭螺栓 M5X12 - CC300D		4			
028	XTM0000019	OIL TANK ASS'Y		1			
030	XTM0000020	TANK CAP ASS'Y		1			
031	XTM0000021	H.S.H.BOLT M5X12SW		2			
032	XTM0000022	CHAIN COVER		1			
033	XTM0000023	FLANGE NUT M6		1			
034	165695-7	導板10 - EY401MP		1			
035	196142-7	鋸鏈組合 - EY401MP		1	*		
035-1	191H20-4	SAW CHAIN 10 SET	O	1			
036	452093-7	10"導板護罩 - DCS232T		1	*		
036-1	452093-7	10"導板護罩 - DCS232T	O	1			
037	961003-8	擋圈S-7 - 9016S		1			
038	326088-5	主軸A - EM400MP		1			

039	819312-8	MAKITA LOGO LABEL		1			
040	800E06-6	CAUTION LABEL		1	*		
040-1	810V40-0	CAUTION LABEL	X	1			
041	141106-6	主軸管A總成 - EN400MP		1	*		
041-1	144169-1	GRIP PIPE COMPLETE	X	1	*		
C10	141106-6	主軸管A總成 - EN400MP		1	*		
C20	424857-9	GRIP		1	*		
041-1		INC. 43,44			*		
041-2	140W23-5	GRIP PIPE COMPLETE A	<	1	*		
041-2		INC. 43,44			*		
041-3	141Y20-6	Grip pipe complete A	<	1			
041-3		INC. 43,44					
042	424434-7	防塵帽24 - EM400MP		1			
043	141106-6	主軸管A總成 - EN400MP		1			
C10	141188-8	BUSH COMPLETE		4			
044	424857-9	GRIP		1	*		
044-1	422562-2	GRIP 33	<	1	*		
044-2	422A64-4	Grip 33	<	1			
A01	782233-6	BOX DRIVER 10-16		1			
A02	783020-6	- DRIVER		1			
E01	808723-2	CAUTION LABEL		1			
F04-1	199927-0	POLE SAW ATTACHMENT SET	<	1			