Model No. GA7050 180MM ANGLE GRINDER

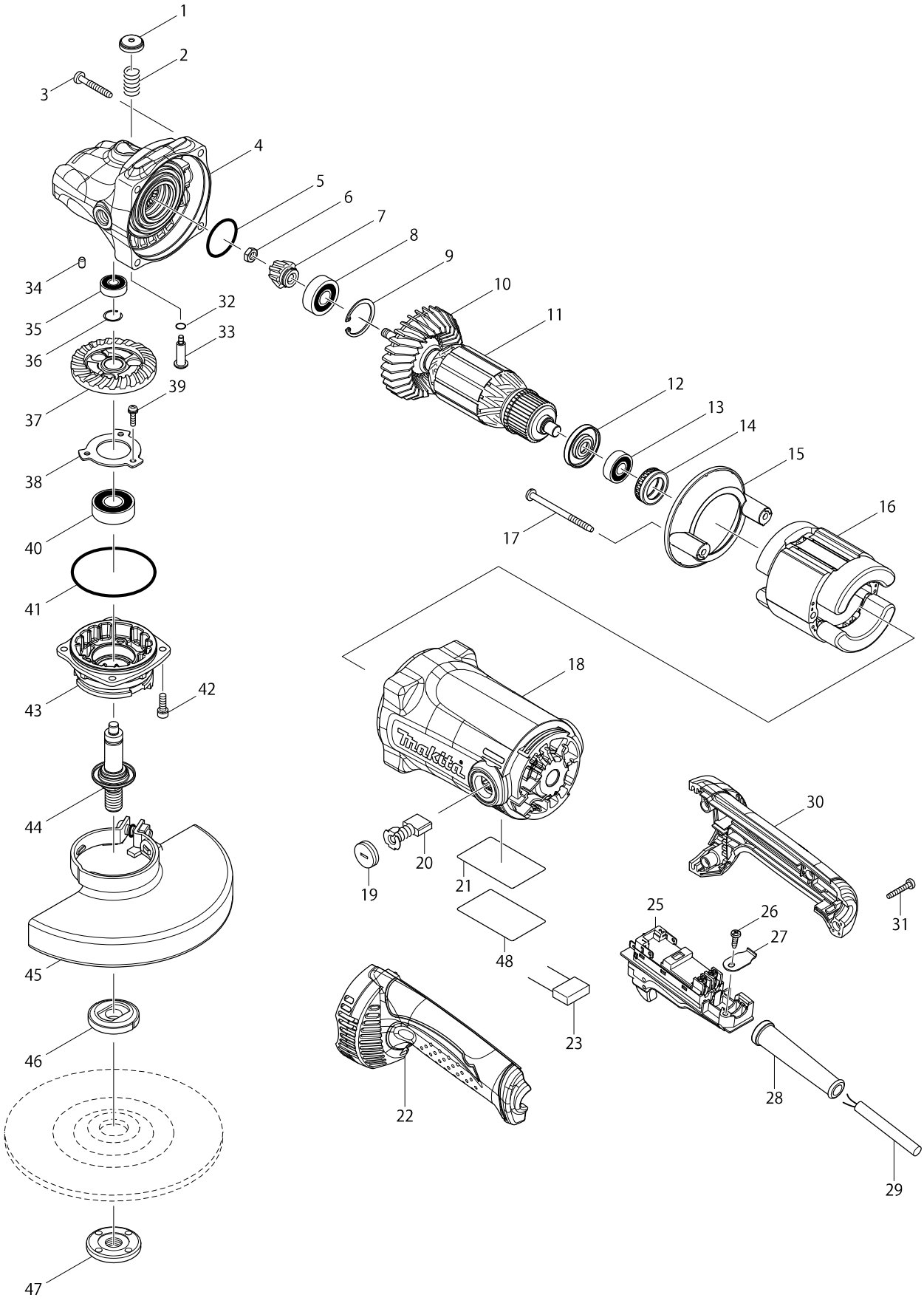

Model No. GA7050 180MM ANGLE GRINDER

Item	Parts No.	Description	I/C	Qty	N/O	Sales	Purch.	Note
001	451485-7	PIN CAP		1				
002	233292-8	COMPRESSION SPRING 12		1				
003	266373-3	TAPPING SCREW 5X35		4				
004	140223-9	GEAR HOUSING COMPLETE		1	*			
C10	262153-5	FELT RING 16		1	*			
004-1	143016-3	GEAR HOUSING COMPLETE	<	1				
C10	262153-5	FELT RING 16		1				
005	213487-9	O RING 31		1				
006	264010-3	HEX.NUT M7		1				
007	227564-1	SPIRAL BEVEL GEAR 10A		1				
008A	211129-9	BALL BEARING 6201DDW		1	*			
008-1A	211137-0	BALL BEARING 6201LLU	<	1				
008-1B	211137-0	BALL BEARING 6201LLU		1				
009	257965-9	RETAINING RING (INT) R-32		1				
010	240120-0	FAN 80		1				
D10		INC. 10,12,13						
011A	517853-5	ARMATURE ASSEMBLY 220V		1				
011B	517851-9	ARMATURE ASSEMBLY 115V		1				
012	681657-2	INSULATION WASHER		1				
013	210059-1	BALL BEARING 6000DDW		1				
014	421490-8	RUBBER RING 26		1				
015	451480-7	BAFFLE PLATE		1				
C10	654098-5	RECEPTACLE		2				
016A	523413-3	FIELD ASSEMBLY 220V		1				
016B	523411-7	FIELD ASSEMBLY 115V		1				
017	266389-8	TAPPING SCREW 5X70		2	*			
017-1	266038-7	TAPPING SCREW 5X70	O	2				
018	140222-1	MOTOR HOUSING COMPLETE		1				
C10	643707-1	BRUSH HOLDER		2				
019	643700-5	BRUSH HOLDER CAP 7-18		2				
020	191957-7	A.C. CARBON BRUSH CB-204		1				
021	867553-0	GA7050 NAME PLATE		1				
022	188848-1	HANDLE SET		1				
C10	423404-3	SPONGE SHEET		1				
D10		INC. 30						
025	650101-0	SWITCH TG08-1100-011		1				
026	266385-6	TAPPING SCREW 4X14		1				
027	687169-3	STRAIN RELIEF		1				
028	682574-9	CORD GUARD 10-90		1				
029A	692527-0	POWER SUPPLY CORD 1.0-2-2.5		1				
029B	664463-0	POWER SUPPLY CORD AWG#14-2-2.5		1				
030	188848-1	HANDLE SET		1				
C10	423404-3	SPONGE SHEET		1				
D10		INC. 22						
031	266374-1	TAPPING SCREW 4X25		4				
032	213026-5	O RING 7		1				
033	256516-5	SHOULDER PIN 11		1				
034	263002-9	RUBBER PIN 4		1				

Model No. GA7050 180MM ANGLE GRINDER

Item	Parts No.	Description	I/C	Qty	N/O	Sales	Purch.	Note
035	210029-0	BALL BEARING 608ZZ		1				
036	233925-5	RING SPRING 13		1				
037	227562-5	SPIRAL BEVEL GEAR 38		1				
038	285851-4	BEARING RETAINER		1				
039	911128-8	PAN HEAD SCREW M4X16		3				
040	211241-5	BALL BEARING 6202DDW		1				
041	213720-9	O RING 67		1				
042	922221-3	HEX. SOCKET HEAD BOLT M5X16		4				
043	318523-7	BEARING BOX		1				
044	140224-7	SPINDLE COMPLETE A		1				
C10	346166-5	LABYRINTH RING 23		1				
045	122889-7	WHEEL COVER 180K ASSEMBLY		1				
C10	213017-6	O RING 6		1				
C20	265198-2	+PAN HEAD SCREW M8X25		1				
046	224415-9	INNER FLANGE 42		1				
047	224543-0	LOCK NUT 14-45		1				
048A	819392-4	CLEAR LABEL		1	*			
048-1A	892805-0	CLEAR LABEL		1				
048-1B	892805-0	CLEAR LABEL		1				
A01	152539-0	GRIP 36 COMPLETE		1				
A02	782407-9	LOCK NUT WRENCH 35		1				