# Model No. GA9050  230MM ANGLE GRINDER

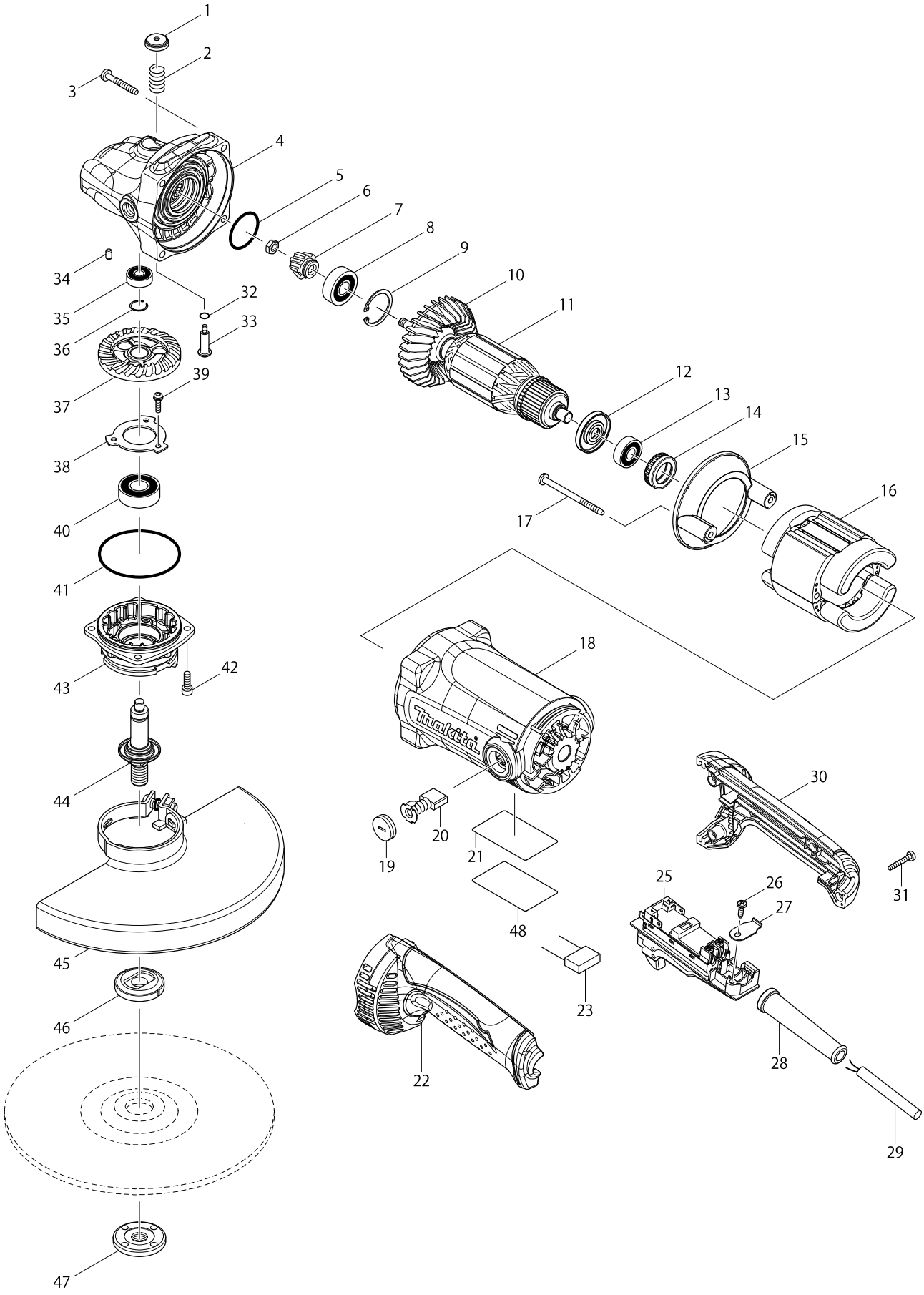

# Model No. GA9050 230MM ANGLE GRINDER



| Item | Parts No. | Description | I/C | Qty | N/O | Sales | Purch. | Note |
|---|---|---|---|---|---|---|---|---|
| 001 | 451485-7 | PIN CAP | | 1 | | | | |
| 002 | 233292-8 | COMPRESSION SPRING 12 | | 1 | | | | |
| 003 | 266373-3 | TAPPING SCREW 5X35 | | 4 | | | | |
| 004 | 140223-9 | GEAR HOUSING COMPLETE | | 1 | * | | | |
| C10 | 262153-5 | FELT RING 16 | | 1 | * | | | |
| 004-1 | 143016-3 | GEAR HOUSING COMPLETE | < | 1 | | | | |
| C10 | 262153-5 | FELT RING 16 | | 1 | | | | |
| 005 | 213487-9 | O RING 31 | | 1 | | | | |
| 006 | 264010-3 | HEX.NUT M7 | | 1 | | | | |
| 007 | 227563-3 | SPIRAL BEVEL GEAR 10B | | 1 | | | | |
| 008A | 211129-9 | BALL BEARING 6201DDW | | 1 | * | | | |
| 008-1A | 211137-0 | BALL BEARING 6201LLU | < | 1 | | | | |
| 008-1B | 211137-0 | BALL BEARING 6201LLU | | 1 | | | | |
| 009 | 257965-9 | RETAINING RING (INT) R-32 | | 1 | | | | |
| 010 | 240120-0 | FAN 80 | | 1 | | | | |
| D10 | | INC. 10,12,13 | | | | | | |
| 011A | 517853-5 | ARMATURE ASSEMBLY 220V | | 1 | | | | |
| 011B | 517851-9 | ARMATURE ASSEMBLY 115V | | 1 | | | | |
| 012 | 681657-2 | INSULATION WASHER | | 1 | | | | |
| 013 | 210059-1 | BALL BEARING 6000DDW | | 1 | | | | |
| 014 | 421490-8 | RUBBER RING 26 | | 1 | | | | |
| 015 | 451480-7 | BAFFLE PLATE | | 1 | | | | |
| C10 | 654098-5 | RECEPTACLE | | 2 | | | | |
| 016A | 523413-3 | FIELD ASSEMBLY 220V | | 1 | | | | |
| 016B | 523411-7 | FIELD ASSEMBLY 115V | | 1 | | | | |
| 017 | 266389-8 | TAPPING SCREW 5X70 | | 2 | * | | | |
| 017-1 | 266038-7 | TAPPING SCREW 5X70 | O | 2 | | | | |
| 018 | 140222-1 | MOTOR HOUSING COMPLETE | | 1 | | | | |
| C10 | 643707-1 | BRUSH HOLDER | | 2 | | | | |
| 019 | 643700-5 | BRUSH HOLDER CAP 7-18 | | 2 | | | | |
| 020 | 191957-7 | A.C. CARBON BRUSH CB-204 | | 1 | | | | |
| 021 | 867561-1 | GA9050 NAME PLATE | | 1 | | | | |
| 022 | 188848-1 | HANDLE SET | | 1 | | | | |
| C10 | 423404-3 | SPONGE SHEET | | 1 | | | | |
| D10 | | INC. 30 | | | | | | |
| 025 | 650101-0 | SWITCH TG08-1100-011 | | 1 | | | | |
| 026 | 266385-6 | TAPPING SCREW 4X14 | | 1 | | | | |
| 027 | 687169-3 | STRAIN RELIEF | | 1 | | | | |
| 028 | 682574-9 | CORD GUARD 10-90 | | 1 | | | | |
| 029A | 692527-0 | POWER SUPPLY CORD 1.0-2-2.5 | | 1 | | | | |
| 029B | 664463-0 | POWER SUPPLY CORD AWG#14-2-2.5 | | 1 | | | | |
| 030 | 188848-1 | HANDLE SET | | 1 | | | | |
| C10 | 423404-3 | SPONGE SHEET | | 1 | | | | |
| D10 | | INC. 22 | | | | | | |
| 031 | 266374-1 | TAPPING SCREW 4X25 | | 4 | | | | |
| 032 | 213026-5 | O RING 7 | | 1 | | | | |
| 033 | 256516-5 | SHOULDER PIN 11 | | 1 | | | | |
| 034 | 263002-9 | RUBBER PIN 4 | | 1 | | | | |

# Model No. GA9050 230MM ANGLE GRINDER



| Item | Parts No. | Description | I/C | Qty | N/O | Sales | Purch. | Note |
|---|---|---|---|---|---|---|---|---|
| 035 | 210029-0 | BALL BEARING 608ZZ | | 1 | | | | |
| 036 | 233925-5 | RING SPRING 13 | | 1 | | | | |
| 037 | 227561-7 | SPIRAL BEVEL GEAR 49 | | 1 | | | | |
| 038 | 285851-4 | BEARING RETAINER | | 1 | | | | |
| 039 | 911128-8 | PAN HEAD SCREW M4X16 | | 3 | | | | |
| 040 | 211241-5 | BALL BEARING 6202DDW | | 1 | | | | |
| 041 | 213720-9 | O RING 67 | | 1 | | | | |
| 042 | 922221-3 | HEX. SOCKET HEAD BOLT M5X16 | | 4 | | | | |
| 043 | 318523-7 | BEARING BOX | | 1 | | | | |
| 044 | 140224-7 | SPINDLE COMPLETE A | | 1 | | | | |
| C10 | 346166-5 | LABYRINTH RING 23 | | 1 | | | | |
| 045 | 122891-0 | WHEEL COVER 230K ASSEMBLY | | 1 | | | | |
| C10 | 213017-6 | O RING 6 | | 1 | | | | |
| C20 | 265198-2 | +PAN HEAD SCREW M8X25 | | 1 | | | | |
| 046 | 224415-9 | INNER FLANGE 42 | | 1 | | | | |
| 047 | 224543-0 | LOCK NUT 14-45 | | 1 | | | | |
| 048A | 819392-4 | CLEAR LABEL | | 1 | * | | | |
| 048-1A | 892805-0 | CLEAR LABEL | | 1 | | | | |
| 048-1B | 892805-0 | CLEAR LABEL | | 1 | | | | |
| A01 | 152539-0 | GRIP 36 COMPLETE | | 1 | | | | |
| A02 | 782407-9 | LOCK NUT WRENCH 35 | | 1 | | | | |