Model No. GA9061R 230MM ANGLE GRINDER

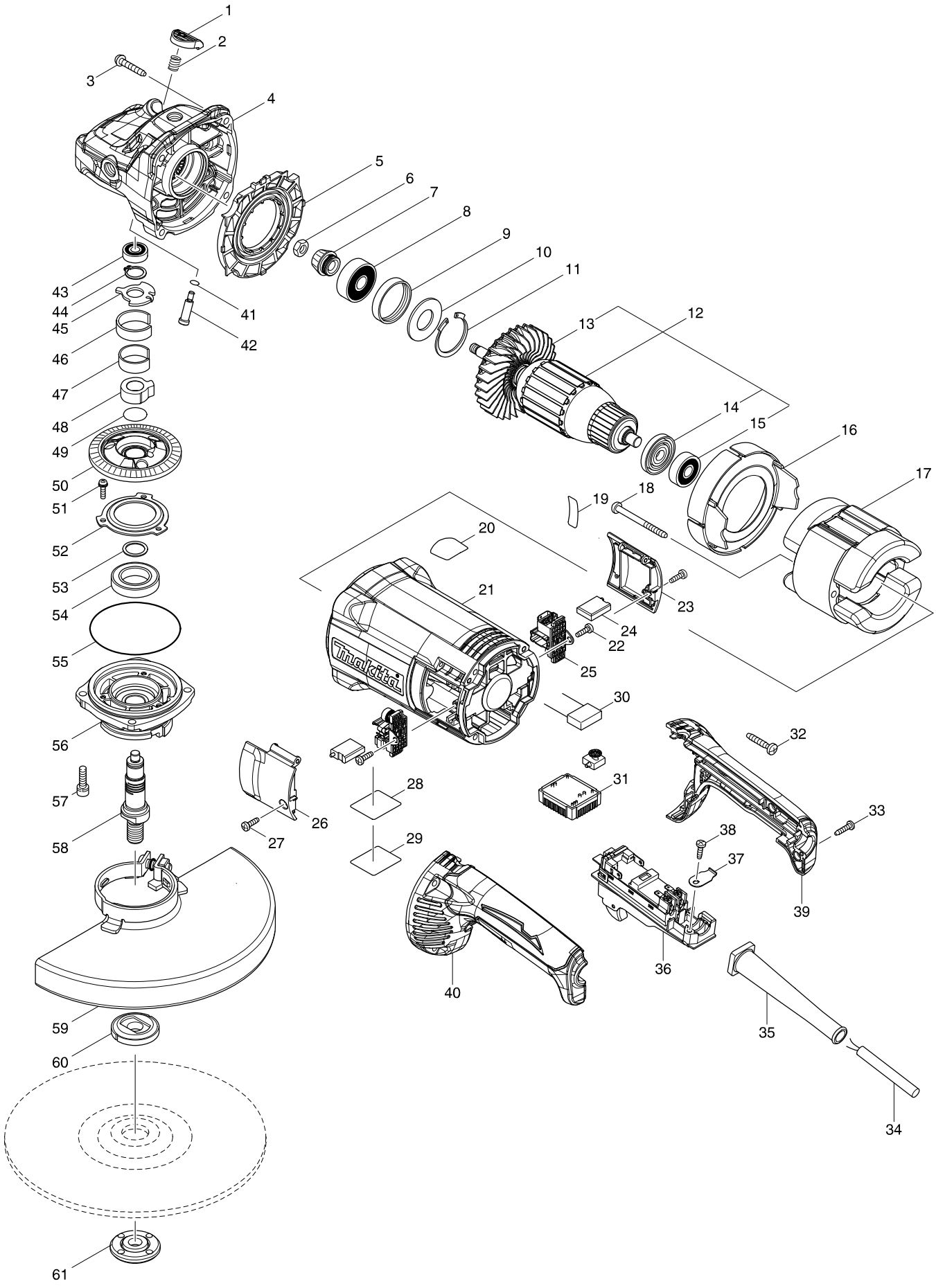

Model No. GA9061R 230MM ANGLE GRINDER

Item	Parts No.	Description	I/C	Qty	N/O	Sales	Purch.	Note
001	456247-8	PIN CAP		1				
002	234391-9	COMPRESSION SPRING 8		1				
003	251489-7	TAPPING SCREW 5X30		4				
004	143485-8	GEAR HOUSING COMPLETE		1				
C10	263002-9	RUBBER PIN 4		1				
005	456238-9	DIFFUSER		1				
006	252194-9	HEX. NUT M8		1				
007	227652-4	SPIRAL BEVEL GEAR 13		1				
008	211132-0	BALL BEARING 6301DDW		1				
009	262085-6	RUBBER RING 38		1				
010	267299-2	FLAT WASHER 20		1				
011	962211-4	RETAINING RING R-42		1				
012	518175-6	ARMATURE ASS'Y 220V		1				
D10		INC. 13-15						
013	240161-6	FAN 86		1				
014	681630-2	INSULATION WASHER		1				
015	211087-9	BALL BEARING 6200DDW		1				
016	456239-7	BAFFLE PLATE		1				
017	621778-8	FIELD 220V		1				
018	266044-2	TAPPING SCREW 5X60		2				
019	851W13-0	GA9061R SERIAL NO. LABEL		1				
020	898443-6	SJS2 MARK LABEL		1				
021	456240-2	MOTOR HOUSING		1				
022	266385-6	TAPPING SCREW 4X14		2				
023	143950-7	BRUSH HOLDER COVER R COMPLETE		1				
024	197129-2	CARBON BRUSH CB-218		1				
025	643714-4	BRUSH HOLDER		2				
026	143949-2	BRUSH HOLDER COVER L COMPLETE		1				
027	266385-6	TAPPING SCREW 4X14		2				
028	851W10-6	GA9061R NAME PLATE		1				
029	808D02-2	CLEAR LABEL		1				
031	620470-3	CONTROLLER		1				
032	251489-7	TAPPING SCREW 5X30		4				
033	266326-2	TAPPING SCREW 4X18		2				
034	692607-2	POWER SUPPLY CORD 1.5-2-2.5		1				
035	682573-1	CORD GUARD 10		1				
036	632F77-9	SWITCH UNIT		1				
037	687169-3	STRAIN RELIEF		1				
038	266385-6	TAPPING SCREW 4X14		1				
039	183C62-2	HANDLE SET		1				
D10		INC. 40						
040	183C62-2	HANDLE SET		1				
D10		INC. 39						
041	213026-5	O RING 7		1				
042	256571-7	SHOULDER PIN 7		1				
043	211032-4	BALL BEARING 608ZZ		1				
044	961055-9	RETAINING RING S-15		1				
045	346980-9	BALANCER		1				

Model No. GA9061R 230MM ANGLE GRINDER

Item	Parts No.	Description	I/C	Qty	N/O	Sales	Purch.	Note
046	346981-7	C TYPE PLATE 33		1				
047	346982-5	C TYPE PLATE 29		1				
048	326640-9	JOINT SLEEVE		1				
049	213859-8	O-RING 19		1				
050	227654-0	SPIRAL BEVEL GEAR 54		1				
051	911128-8	PAN HEAD SCREW M4X16		3				
052	285742-9	BEARING RETAINER 59		1				
053	253725-7	FLAT WASHER 17		1				
054	211377-0	BALL BEARING 6905LLB		1				
055	213760-7	O RING 78		1				
056	143515-5	BEARING BOX COMPLETE		1				
057	265541-5	HEX. SOCKET HEAD BOLT M6X22		4				
058	326641-7	SPINDLE		1				
059	122891-0	WHEEL COVER 230K ASSEMBLY		1				
C10	213017-6	O RING 6		1				
C20	265198-2	+PAN HEAD SCREW M8X25		1				
060	224415-9	INNER FLANGE 42		1				
061	224485-8	LOCK NUT 14-45		1				
A01	143486-6	GRIP 37 COMPLETE		1				
A02	782407-9	LOCK NUT WRENCH 35		1				