# Model No. HR2630T 26MM COMBINATION HAMMER

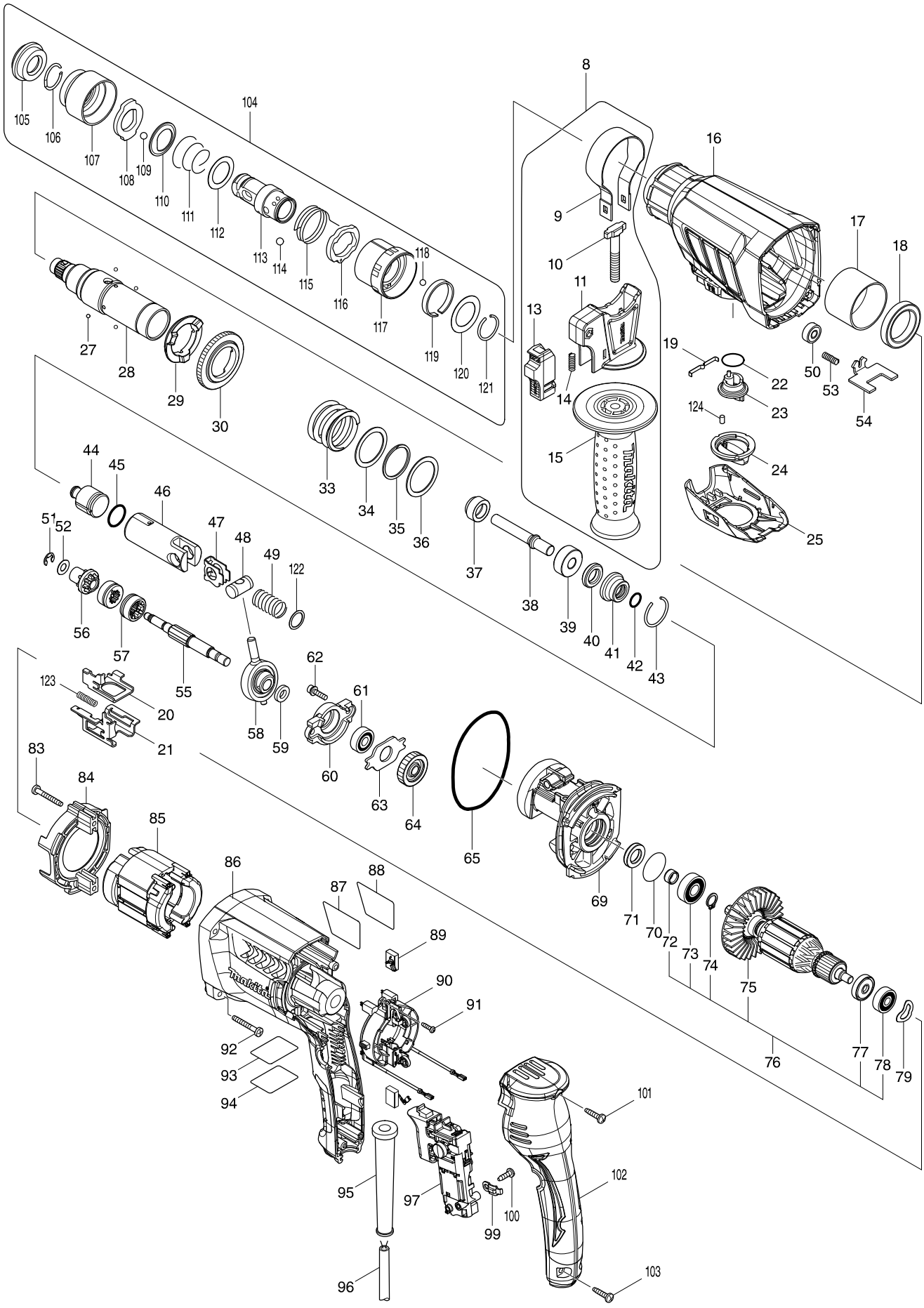

# Model No. HR2630T 26MM COMBINATION HAMMER



| Item | Parts No. | Description | I/C | Qty | N/O | Sales | Purch. | Note |
|---|---|---|---|---|---|---|---|---|
| 008 | 122878-2 | GRIP ASSEMBLY | | 1 | | | | |
| D10 | | INC. 9-11,13-15 | | | | | | |
| 009 | 346181-9 | GRIP SPRING 50 | | 1 | | | | |
| 010 | 266349-0 | SQUARE BOLT M8X50 | | 1 | | | | |
| 011 | 451539-0 | GRIP BASE | | 1 | | | | |
| 013 | 141765-6 | LOCK BUTTON COMPLETE | | 1 | | | | |
| 014 | 233360-7 | COMPRESSION SPRING 4 | | 1 | | | | |
| 015 | 154935-8 | GRIP 36 COMPLETE | | 1 | | | | |
| 016 | 142971-6 | GEAR HOUSING COMPLETE | | 1 | | | | |
| C10 | 213636-8 | OIL SEAL 25 | | 1 | | | | |
| 017 | 331890-3 | CUP SLEEVE | | 1 | | | | |
| 018 | 211294-4 | BALL BEARING 6806LLU | | 1 | | | | |
| 019 | 232286-0 | LEAF SPRING | | 1 | | | | |
| 020 | 346833-2 | CHANGE PLATE B | | 1 | | | | |
| 021 | 346832-4 | CHANGE PLATE A | | 1 | | | | |
| 022 | 213278-8 | O RING 17 | | 1 | | | | |
| 023 | 455392-6 | CHANGE LEVER | | 1 | | | | |
| 024 | 455394-2 | CHANGE LEVER CAP | | 1 | | | | |
| 025 | 455391-8 | CHANGE LEVER COVER | | 1 | | | | |
| 027 | 216019-1 | STEEL BALL 3 | | 4 | | | | |
| 028 | 140266-1 | TOOL HOLDERGUIDE COMPLETE | | 1 | | | | |
| C10 | 213344-1 | OIL SEAL 9 | | 1 | | | | |
| 029 | 332139-4 | DRIVING FLANGE | | 1 | | | | |
| 030 | 227360-7 | SPUR GEAR 51 | | 1 | | | | |
| 033 | 234148-8 | COMPRESSION SPRING 31 | | 1 | | | | |
| 034 | 267153-0 | FLAT WASHER 30 | | 1 | | | | |
| 035 | 257932-4 | SPIRO LOCK WASHER 30 | | 1 | | | | |
| 036 | 267153-0 | FLAT WASHER 30 | | 1 | | | | |
| 037 | 325783-4 | SLEEVE 9B | | 1 | | | | |
| 038 | 325791-5 | IMPACT BOLT B | | 1 | | | | |
| 039 | 325795-7 | RING 10B | | 1 | | | | |
| 040 | 424267-0 | CUSHION RING 12 | | 1 | | | | |
| 041 | 325798-1 | O-RING CASE A | | 1 | | | | |
| 042 | 213073-6 | O RING 9 | | 1 | | | | |
| 043 | 233979-2 | RING SPRING 28 | | 1 | | | | |
| 044 | 325784-2 | STRIKER | | 1 | | | | |
| 045 | 213258-4 | O RING 17.5 | | 1 | | | | |
| 046 | 310345-1 | PISTON CYLINDER | | 1 | | | | |
| 047 | 346036-8 | GUIDE PLATE | | 1 | | | | |
| 048 | 324215-8 | PISTON JOINT | | 1 | | | | |
| 049 | 234098-7 | COMPRESSION SPRING 14 | | 1 | | | | |
| 050 | 210028-2 | BALL BEARING 606ZZ | | 1 | | | | |
| 051 | 257336-0 | STOP RING EXT U-6 | | 1 | | | | |
| 052 | 253186-1 | FLAT WASHER 7 | | 1 | | | | |
| 053 | 233360-7 | COMPRESSION SPRING 4 | | 1 | | | | |
| 054 | 346831-6 | LOCK PLATE | | 1 | | | | |
| 055 | 326448-1 | CAM SHAFT | | 1 | | | | |
| 056 | 227359-2 | SPUR GEAR 10 | | 1 | | | | |

# Model No. HR2630T 26MM COMBINATION HAMMER



| Item | Parts No. | Description | I/C | Qty | N/O | Sales | Purch. | Note |
|---|---|---|---|---|---|---|---|---|
| 057 | 332125-5 | CLUTCH CAM | | 2 | | | | |
| 058 | 219014-0 | SWASH BEARING 10 | | 1 | | | | |
| 059 | 257321-3 | RING 8 | | 1 | | | | |
| 060 | 310344-3 | BEARING BOX | | 1 | | | | |
| 061 | 211032-4 | BALL BEARING 608ZZ | | 1 | | | | |
| 062 | 266437-3 | HEX. SOCKET HEAD BOLT M4X16 | | 2 | | | | |
| 063 | 285735-6 | BEARING RETAINER | | 1 | | | | |
| 064 | 227719-8 | HELICAL GEAR 26 | | 1 | | | | |
| 065 | 213728-3 | O-RING 68 | | 1 | | | | |
| 069 | 141572-7 | INNER HOUSING COMPLETE | | 1 | | | | |
| C10 | 443153-6 | FELT | | 1 | | | | |
| 070 | 213407-3 | O RING 26 | | 1 | | | | |
| 071 | 213678-2 | OIL SEAL 12 | | 1 | | | | |
| 072 | 262569-4 | SLEEVE 9 | | 1 | | | | |
| 073 | 211097-6 | BALL BEARING 6000LLB | | 1 | | | | |
| 074 | 961006-2 | RETAINING RING S-10 | | 1 | | | | |
| 075 | 240121-8 | FAN 65 | | 1 | | | | |
| 076 | 518157-8 | ARMATURE ASSEMBLY 220V | | 1 | | | | |
| D10 | | INC. 72-75,77,78 | | | | | | |
| 077 | 681652-2 | INSULATION WASHER | | 1 | | | | |
| 078 | 210023-2 | BALL BEARING 627DDW | | 1 | | | | |
| 079 | 267804-5 | WAVE WASHER 15 | | 1 | | | | |
| 083 | 266361-0 | TAPPING SCREW 4X30 | | 2 | | | | |
| 084 | 451527-7 | BAFFLE PLATE | | 1 | | | | |
| 085 | 626633-9 | FIELD 220V | | 1 | | | | |
| 086 | 451536-6 | MOTOR HOUSING | | 1 | | | | |
| 087 | 850M38-1 | HR2630T NAME PLATE | | 1 | | | | |
| 088 | 819390-8 | CLEAR LABEL | | 1 | | | | |
| 089 | 194074-2 | CARBON BRUSH CB-325 | | 1 | | | | |
| 090 | 638655-7 | BRUSH HOLDER UNIT | | 1 | | | | |
| 091 | 266556-5 | TAPPING SCREW 3X12 | | 2 | | | | |
| 092 | 266361-0 | TAPPING SCREW 4X30 | | 4 | | | | |
| 093 | 850M42-0 | HR2630T SERIAL NO. LABEL | | 1 | | | | |
| 094 | 819389-3 | CLEAR LABEL | | 1 | | | | |
| 095 | 682566-8 | CORD GUARD 10 | | 1 | | | | |
| 096 | 692502-6 | POWER SUPPLY CORD 1.0-2-4.0 | | 1 | | | | |
| 097 | 650626-4 | SWITCH TG853TB-1 | | 1 | | | | |
| 099 | 687682-1 | STRAIN RELIEF | | 1 | | | | |
| 100 | 266385-6 | TAPPING SCREW 4X14 | | 1 | | | | |
| 101 | 266326-2 | TAPPING SCREW 4X18 | | 1 | | | | |
| 102 | 451528-5 | HANDLE COVER | | 1 | | | | |
| 103 | 266326-2 | TAPPING SCREW 4X18 | | 2 | | | | |
| 104 | 194080-7 | TOOL HOLDER SET | | 1 | | | | |
| D10 | | INC. 105-121 | | | | | | |
| 105 | 286263-4 | CAP 35 | | 1 | | | | |
| 106 | 233940-9 | RING SPRING 19 | | 1 | | | | |
| 107 | 418217-5 | CHUCK COVER | | 1 | | | | |
| 108 | 345333-9 | STOPPER | | 1 | | | | |

# Model No. HR2630T 26MM COMBINATION HAMMER



| Item | Parts No. | Description | I/C | Qty | N/O | Sales | Purch. | Note |
|---|---|---|---|---|---|---|---|---|
| 109 | 216022-2 | STEEL BALL 7.0 | | 1 | | | | |
| 110 | 345187-4 | GUIDE WASHER | | 1 | | | | |
| 111 | 233916-6 | CONICAL COMP. SPRING 21-29 | | 1 | | | | |
| 112 | 267279-8 | FLAT WASHER 21 | | 1 | | | | |
| 113 | 324355-2 | TOOL HOLDER | | 1 | | | | |
| 114 | 216013-3 | STEEL BALL 6 | | 2 | | | | |
| 115 | 231669-1 | TORSION SPRING 31 | | 1 | | | | |
| 116 | 345334-7 | CHANGE RING | | 1 | | | | |
| 117 | 418218-3 | CHANGE COVER | | 1 | | | | |
| 118 | 216018-3 | STEEL BALL 5.0 | | 1 | | | | |
| 119 | 345335-5 | LEAF SPRING | | 1 | | | | |
| 120 | 267270-6 | FLAT WASHER 24 | | 1 | | | | |
| 121 | 233924-7 | RING SPRING 21 | | 1 | | | | |
| 122 | 267447-3 | FLAT WASHER 14 | | 1 | | | | |
| 123 | 234343-0 | COMPRESSION SPRING 5 | | 1 | | | | |
| 124 | 263005-3 | RUBBER PIN 6 | | 1 | | | | |
| A01 | 194079-2 | DRILL CHUCK SET | | 1 | | | | |
| A02 | 331886-4 | DEPTH GAUGE | | 1 | | | | |
| A03 | 824916-3 | PLASTIC CARRYING CASE | | 1 | | | | |
| C10 | 162302-3 | LATCH | | 2 | | | | |