HK	HONG KONG

Diagram / Parts List

PB003G

CORDLESS PORTABLE BAND SAW



2026/04

(HK) PB003G / CORDLESS PORTABLE BAND SAW

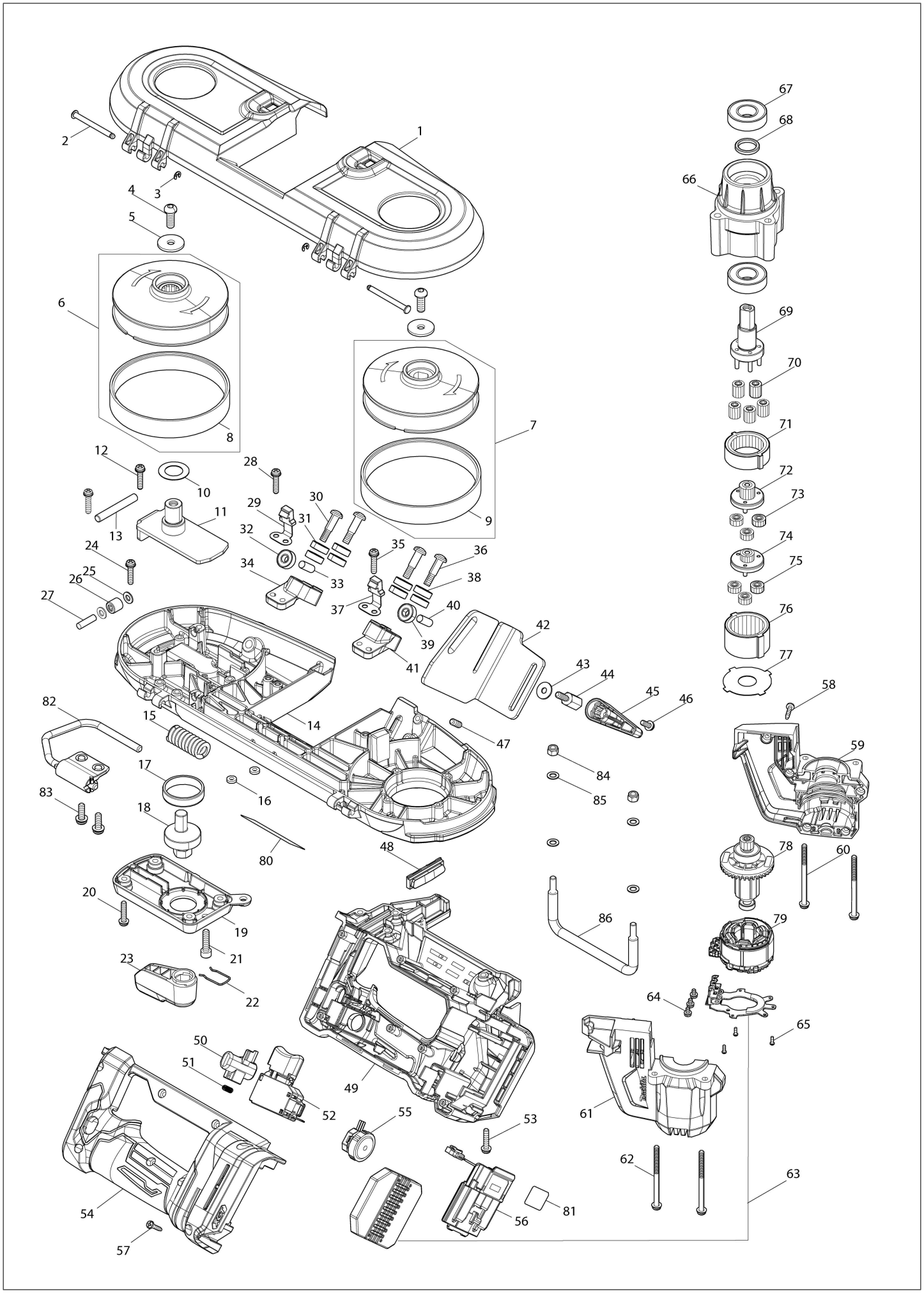

HK HONG KONG

PB003G / CORDLESS PORTABLE BAND SAW

Item	Sub	Parts No.	Parts Description	Qty	I/C	E/C No.	Close No.	Remark
001		412485-2	Wheel cover	1				
002		256689-4	Flat fillister HD. pin 4	2				
003		961017-7	Stop ring (EXT) E-3	2				
004		265484-1	Hex. socket button head bolt M6X17	2				
005		267173-4	Flat washer 6	2				
006		137424-8	WHEEL A ASSY	1				
	D10		INC. 8					
007		136765-9	WHEEL B ASSEMBLY	1				
	D10		INC. 9					
008		424589-8	Rubber tire	1				
009		424589-8	Rubber tire	1				
010		267164-5	Flat washer 15	1				
011		162564-3	Slide plate	1				
012		911138-5	Pan head screw M4X20 WR	2				
013		268241-6	Pin 6	1				
014		1412U9-3	Frame complete	1				
	C10	263005-3	Rubber pin 6	1				
015		234313-9	Compression spring 9	1				
016		262130-7	Urethane ring 4	2				
017		214408-4	Plane bearing 30	1				
018		326351-6	Lever shaft	1				
019		459084-9	Lever holder	1				
020		911138-5	Pan head screw M4X20 WR	4				
021		265382-9	Hex. socket head bolt M5X20	1				
022		231955-0	Ring spring 12	1				
023		271462-1	Lever 54	1				
024		911138-5	Pan head screw M4X20 WR	1				
025		267010-2	Flat washer 5	2				
026		212199-1	Needle bearing 510	1				
027		256155-1	Pin 5	1				
028		911138-5	Pan head screw M4X20 WR	2				
029		162815-4	Hook	1				
030		251337-0	Pan head shoulder screw M5	2				
031		210187-2	Ball bearing 696ZZ	4				
032		210187-2	Ball bearing 696ZZ	1				
033		256033-5	Pin 6	1				
034		312J78-4	Upper holder	1				
035		911138-5	Pan head screw M4X20 WR	2				
036		251337-0	Pan head shoulder screw M5	2				
037		162815-4	Hook	1				
038		210187-2	Ball bearing 696ZZ	4				
039		210187-2	Ball bearing 696ZZ	1				
040		256033-5	Pin 6	1				
041		312J77-6	Lower holder	1				
042		346728-9	Stopper plate	1				
043		253194-2	Flat washer 5	1				
044		265E87-1	Hex. head bolt M5X15	1				
045		271490-6	Lever 40	1				
046		911118-1	Pan head screw M4X12 WR	1				
047		266213-5	Hex. socket set screw (flat point) M- ...	1				
048		620R06-6	LED circuit	1				
049		1832C5-9	HANDLE SET	1				
	C10	263005-3	Rubber pin 6	2				
	D10		INC. 54					
050		412551-5	Lock off button	1			E3406	
050-1		4137J5-7	Lock off button	1	<	E3406	E3851	
050-2		4137P6-7	LOCK OFF BUTTON	1	<	E3851		
051		231433-0	Compression spring 4	1				
052		651486-7	Switch C3JW-4B-R	1				
053		911138-5	Pan head screw M4X20 WR	4				
054		1832C5-9	HANDLE SET	1				
	C10	263005-3	Rubber pin 6	2				
	D10		INC. 49					
055		620T33-5	Dial circuit	1				
056		632W78-9	Terminal unit	1			E3423	

Interchange
O : Yes
X : No
< : the new part can be substituted for the current.
> : the current part can be substituted for the new.
S : Interchangeable as a set.

HK HONG KONG

PB003G / CORDLESS PORTABLE BAND SAW

Item	Sub	Parts No.	Parts Description	Qty	I/C	E/C No.	Close No.	Remark
056-1		632W78-9	Terminal unit	1	O	E3423		
057		266130-9	Binding head tapping screw 3X16	8				
058		266130-9	Binding head tapping screw 3X16	5				
059		1832D4-8	MOTOR HOUSING SET	1				
	D10		INC. 61					
060		911188-0	Pan head screw M4X60 WR	2				
061		1832D4-8	MOTOR HOUSING SET	1				
	D10		INC. 59					
062		911188-0	Pan head screw M4X60 WR	2				
063		620T32-7	Controller	1				
064		652069-6	Flat head screw M3X6	3				
065		266490-9	Pan head tapping screw 2X6	3				
066		319980-2	Gear housing	1				
067		211247-3	Ball bearing 6002DDW	2				
068		257348-3	Ring 15	1				
069		140T74-0	Spindle complete	1				
070		226924-4	Spur gear 11	5				
071		226922-8	Internal gear 39	1				
072		140M81-1	Spur gear 16 complete	1				
073		226923-6	Spur gear 13	3				
074		140M80-3	Spur gear 14B complete	1				
075		226923-6	Spur gear 13	3				
076		226921-0	Internal gear 40	1				
077		253474-6	Lock washer	1				
078		619628-9	Rotor	1				
079		629D69-5	Stator	1				
080		8154W5-0	PB003G NAME PLATE	1				
081		8154W6-8	PB003G SERIAL NO. LABEL	1				
082		122B60-5	Hook assembly	1				
083		911223-4	Pan head screw M5X16 WR	2				
084		264013-7	Hex. lock nut M5-8	2				
085		941102-2	Flat washer 5	4				
086		327637-1	Guard	1				
A01		B-40559	PORTABLE BANDSAW BLADE 18TPI	1				
A02		783202-0	Hex. wrench 4	1				
F02		1917F0-6	Stand set	1			E2731	
F02-1		1917F0-6	Stand set	1	O	E2731		
F03		191897-9	Cutting wax set	1				
F04		821950-4	PLASTIC CASE	1				

Interchange
O : Yes
X : No
< : the new part can be substituted for the current.
> : the current part can be substituted for the new.
S : Interchangeable as a set.