HK	HONG KONG

Diagram / Parts List

TR001G

CORDLESS REBAR TYING TOOL



2025/10

(HK) TR001G / CORDLESS REBAR TYING TOOL

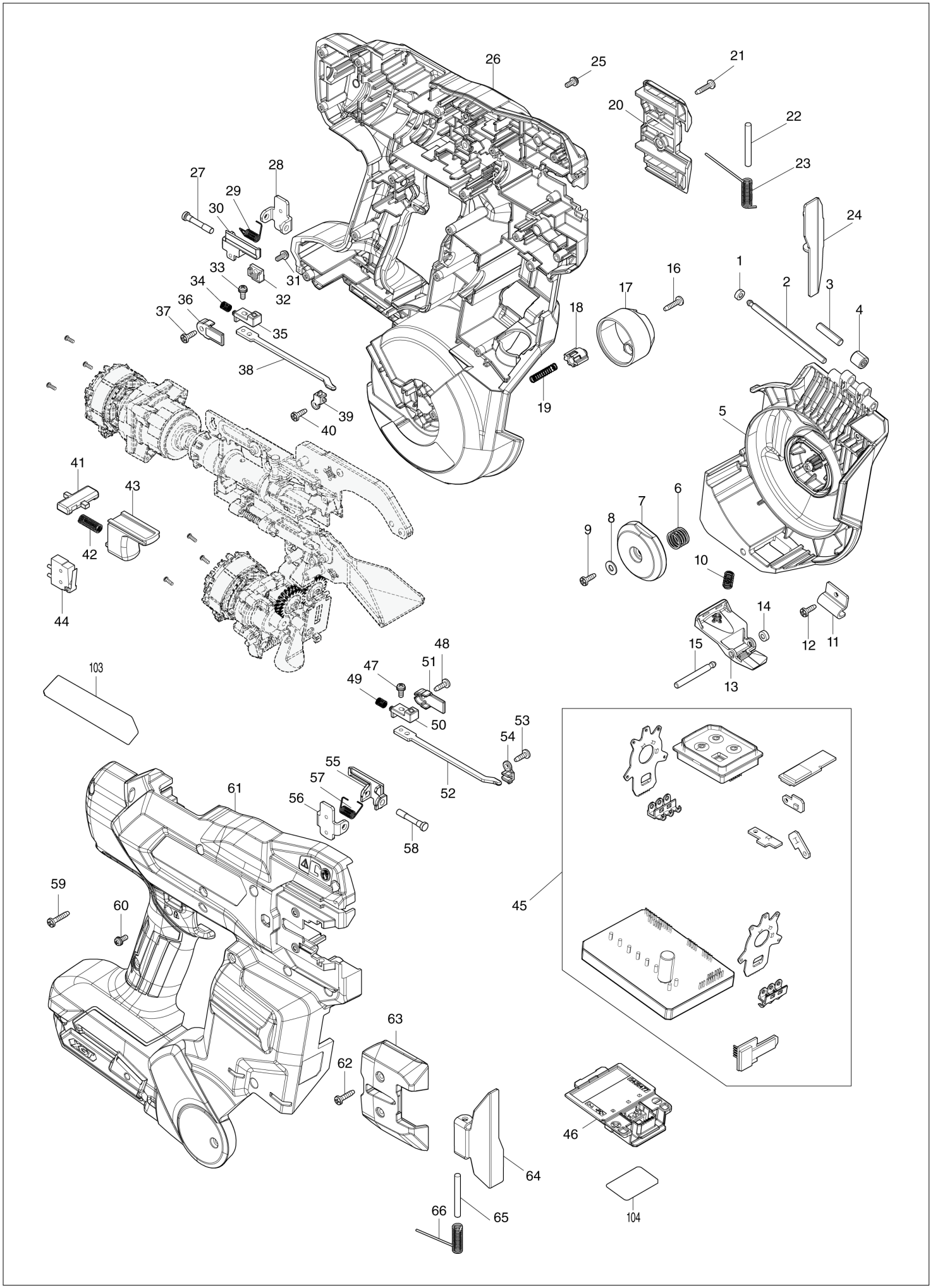

(HK) TR001G / CORDLESS REBAR TYING TOOL

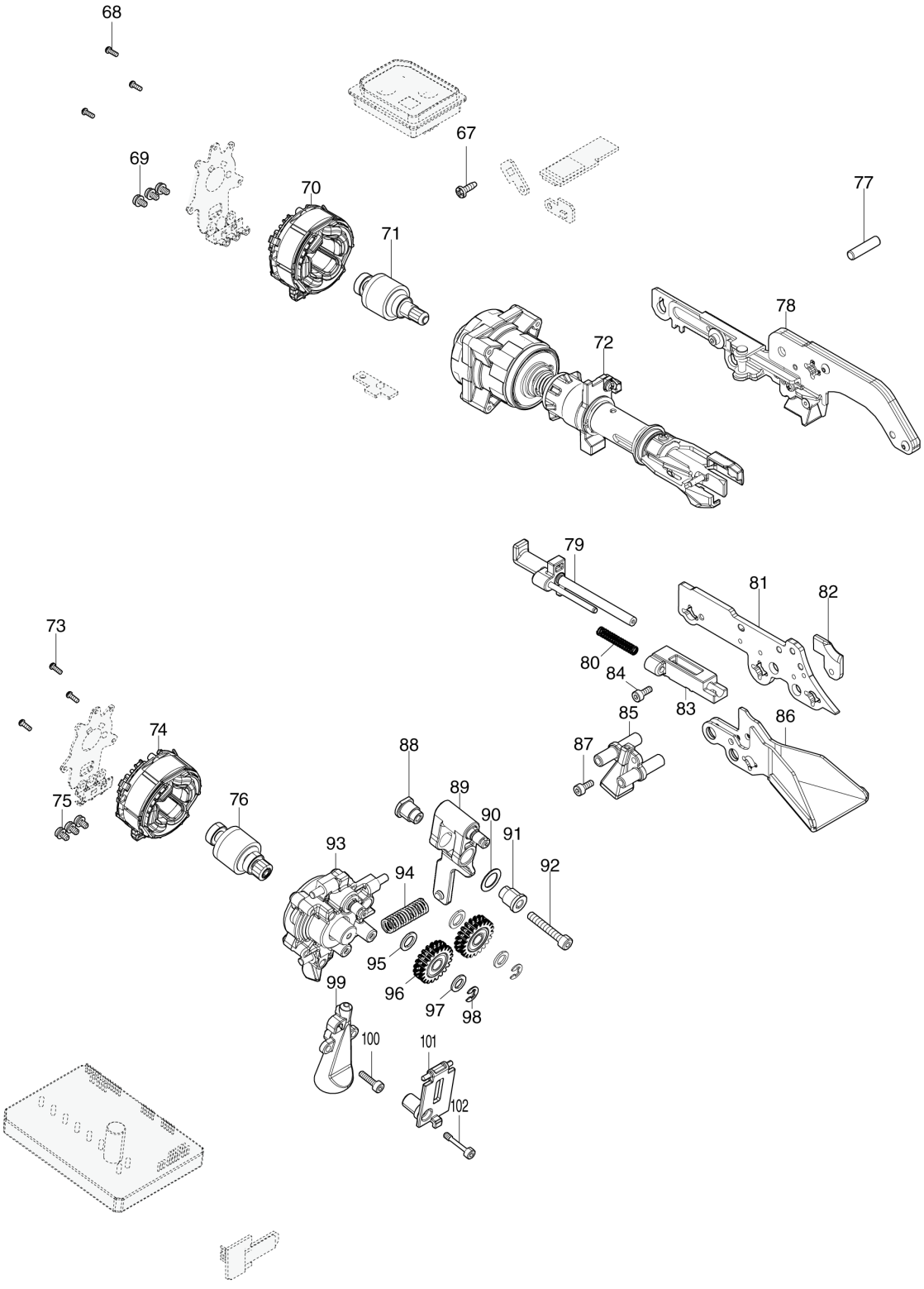

HK | HONG KONG

TR001G / CORDLESS REBAR TYING TOOL

Item	Sub	Parts No.	Parts Description	Qty	I/C	E/C No.	Close No.	Remark
001		262054-7	URETHANE RING 3	1				
002		256A96-7	GROOVED PIN 4B	1				
003		268238-5	PIN 5	1				
004		212009-2	NEEDLE BEARING 509	1				
005		1412D2-8	MAGAZINE COVER COMPLETE	1				
006		232924-4	COMPRESSION SPRING 11	1				
007		312H72-4	REEL BEARING	1				
008		941051-3	FLAT WASHER 4	1				
009		266007-8	TAPPING SCREW BIND PT 3X10	1				
010		233388-5	COMPRESSION SPRING 5	1				
011		347D47-0	GUIDE PLATE	1				
012		266007-8	TAPPING SCREW BIND PT 3X10	1				
013		4131T9-3	MAGAZINE COVER LOCK	1				
014		262054-7	URETHANE RING 3	1				
015		256A93-3	GROOVED PIN 4A	1				
016		266404-8	TAPPING SCREW BIND 3X14	2				
017		312H73-2	REEL BASE	1				
018		1410Y0-7	MAGNET HOLDER D COMPLETE	1				
019		232921-0	COMPRESSION SPRING 4C	1				
020		4131U3-2	PLATE COVER	1				
021		266404-8	TAPPING SCREW BIND 3X14	2				
022		268136-3	PIN 4	1				
023		232925-2	TORSION SPRING 4A	1				
024		347D33-1	SIDE PLATE	1				
025		911008-8	PAN HEAD SCREW M3X8	2				
026		1831M0-3	HOUSING SET	1				
	C10	263005-3	RUBBER PIN 6	2				
	C20	252126-6	HEX. LOCK NUT M4-7	2				
	C30	8091F3-7	CAUTION LABEL A	1				
	C40	8091F5-3	CAUTION LABEL B	1				
	C50	8091F1-1	INDICATION LABEL	1				
	D10		INC. 61					
027		256A89-4	SHOULDER PIN 4C	1				
028		347D30-7	STOPPER BASE	1				
029		232916-3	TORSION SPRING 4B	1				
030		313610-7	STOPPER	1				
031		911008-8	PAN HEAD SCREW M3X8	1				
032		1410X5-0	MAGNET HOLDER C COMPLETE	1				
033		911008-8	PAN HEAD SCREW M3X8	1				
034		232922-8	COMPRESSION SPRING 4B	1				
035		1410Y1-5	MAGNET HOLDER A COMPLETE	1				
036		4131U6-6	SLIDE PLATE COVER	1				
037		266007-8	TAPPING SCREW BIND PT 3X10	1				
038		347D32-3	SLIDE PLATE	1				
039		347D38-1	SLIDE PLATE GUIDE	1				
040		266007-8	TAPPING SCREW BIND PT 3X10	1				
041		458219-9	TRIGGER LOCK	1				
042		234037-7	COMPRESSION SPRING 5	1				
043		458220-4	TRIGGER	1				
044		632W63-2	SWITCH UNIT	1				
045		1411B8-6	CONTROLLER COMPLETE	1				
046		632P65-6	TERMINAL UNIT	1				
047		911008-8	PAN HEAD SCREW M3X8	1				
048		266007-8	TAPPING SCREW BIND PT 3X10	1				
049		232922-8	COMPRESSION SPRING 4B	1				
050		1410Y1-5	MAGNET HOLDER A COMPLETE	1				
051		4131U6-6	SLIDE PLATE COVER	1				
052		347D32-3	SLIDE PLATE	1				
053		266007-8	TAPPING SCREW BIND PT 3X10	1				
054		347D38-1	SLIDE PLATE GUIDE	1				
055		313610-7	STOPPER	1				
056		347D30-7	STOPPER BASE	1				
057		232916-3	TORSION SPRING 4B	1				
058		256A89-4	SHOULDER PIN 4C	1				
059		266130-9	TAPPING SCREW BIND PT 3X16	17				

Z:TR001GZ(N)

Interchange
O : Yes
X : No
< : the new part can be substituted for the current.
> : the current part can be substituted for the new.
S : Interchangeable as a set.

HK | HONG KONG

TR001G / CORDLESS REBAR TYING TOOL

Item	Sub	Parts No.	Parts Description	Qty	I/C	E/C No.	Close No.	Remark
060		911008-8	PAN HEAD SCREW M3X8	2				
061		1831M0-3	HOUSING SET	1				
	C10	263005-3	RUBBER PIN 6	2				
	C20	252126-6	HEX. LOCK NUT M4-7	2				
	C30	8091F3-7	CAUTION LABEL A	1				
	C40	8091F5-3	CAUTION LABEL B	1				
	C50	8091F1-1	INDICATION LABEL	1				
	D10		INC. 26					
062		266404-8	TAPPING SCREW BIND 3X14	2				
063		4131U3-2	PLATE COVER	1				
064		347D33-1	SIDE PLATE	1				
065		268136-3	PIN 4	1				
066		232925-2	TORSION SPRING 4A	1				
067		266007-8	TAPPING SCREW BIND PT 3X10	2				
068		266490-9	TAPPING SCREW PT 2X6	3				
069		652069-6	FLAT HEAD SCREW M3X6	3				
070		629D10-8	STATOR	1				
071		619896-4	ROTOR	1				
072		122K70-6	TWIST ASSEMBLY	1				
073		266490-9	TAPPING SCREW PT 2X6	3				
074		629D11-6	STATOR	1				
075		652069-6	FLAT HEAD SCREW M3X6	3				
076		619897-2	ROTOR	1				
077		256A08-0	PIN 5	1				
078		122K54-4	CURL GUIDE ASSEMBLY	1				
079		1411G5-7	CUTTER COMPLETE	1				
080		232923-6	COMPRESSION SPRING 4D	1				
081		347D29-2	CUTTER BASE	1				
082		313613-1	WIRE BENDER	1				
083		313606-8	CUTTER GUIDE	1				
084		265634-8	HEX SOCKET HEAD BOLT M3X8	4				
085		313608-4	WIRE GUIDE B	1				
086		347D34-9	CURL GUIDE C	1				
087		265634-8	HEX SOCKET HEAD BOLT M3X8	1				
088		327E72-3	SHOULDER SLEEVE 4B	1				
089		122K71-4	RELEASE LEVER ASSEMBLY	1				
090		253623-5	FLAT WASHER 9	1				
091		327E71-5	SHOULDER SLEEVE 4A	1				
092		922147-9	HEX. SOCKET HEAD BOLT M4X25	1				
093		122K72-2	FEED GEAR BASE ASSEMBLY	1				
094		232919-7	COMPRESSION SPRING 6	1				
095		253632-4	FLAT WASHER 7	2				
096		137328-4	SPUR GEAR 21 ASSEMBLY	2				
097		253077-6	FLAT WASHER 6	2				
098		961011-9	STOP RING E-4	2				
099		313603-4	WIRE GUIDE A	1				
100		266080-8	HEX. SOCKET HEAD BOLT M3X12	2				
101		4131T8-5	GEAR COVER	1				
102		265E18-0	H.S.H.BOLT M3X17	1				
103		8151G5-0	TR001G NAME PLATE	1				
104		8151G9-2	TR001G SERIAL NO. LABEL	1				
A01		194381-3	OIL SUPPLY SET	1				
A02		266622-8	+ TRUSS HEAD SCREW M4X12	1				
A03		347D31-5	HOOK	1				
A04		783208-8	HEX. WRENCH 2.5	1				
A05		821552-6	CONNECTOR PLASTIC CASE (TYPE4)	1				
	C10	453974-8	LATCH	4				
A06		836433-1	INNER TRAY	1				
F01		1915N0-0	TIE WIRE SET	1				
F02		1915N1-8	GALVANIZED TIE WIRE SET	1				
F03		1915N2-6	POLY COATED TIE WIRE SET	1				
F04		1915N3-4	STAINLESS STEEL TIE WIRE SET	1				
F05		1915N6-8	EXTENSION HANDLE SET	1				

Z:TR001GZ(N)

Interchange
O : Yes
X : No
< : the new part can be substituted for the current.
> : the current part can be substituted for the new.
S : Interchangeable as a set.