HK	HONG KONG

Diagram / Parts List

UB003C

BATTERY POWERED BLOWER



2024/12

(HK) UB003C / BATTERY POWERED BLOWER

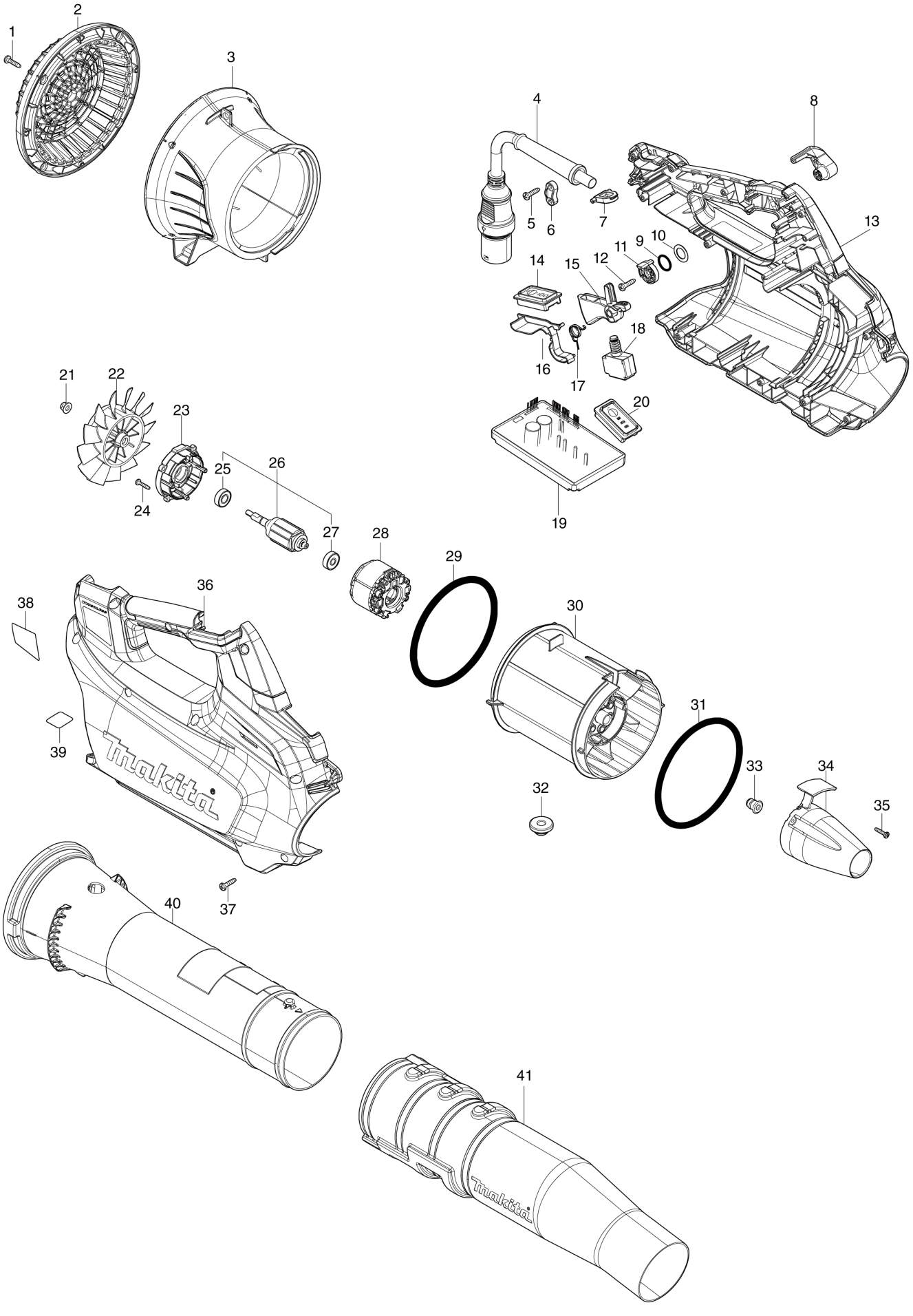

HK | HONG KONG

UB003C / BATTERY POWERED BLOWER

Item	Sub	Parts No.	Parts Description	Qty	I/C	E/C No.	Close No.	Remark
001		266326-2	TAPPING SCREW 4X18	4				
002		412749-4	REAR COVER	1				
003		141T88-2	REAR HOUSING COMPLETE	1				
004		699236-2	POWER SUPPLY CORD UNIT	1				
005		266326-2	TAPPING SCREW 4X18	2				
006		687149-9	STRAIN RELIEF	1				
007		413W38-8	HOOK	1				
008		413W40-1	CONTROL LEVER	1				
009		213154-6	O RING 14	1				
010		253798-0	FLAT WASHER 13	1				
011		412754-1	LINK	1				
012		266326-2	TAPPING SCREW 4X18	1				
013		1830H7-8	HOUSING SET	1			DV738	
	C10	8011Y4-4	CAUTION LABEL	1			DV738	
	D10		INC. 36				DV738	
013-1		1830H7-8	HOUSING SET	1	O	DV738		
	C10	8012T7-9	CAUTION LABEL	1	O	DV738		
	D10		INC. 36			DV738		
014		620N41-0	SWITCH CIRCUIT COMPLETE	1				
	C10	8065C7-3	SWITCH LABEL	1				
015		413W37-0	SWITCH LEVER	1				
016		413W39-6	GUIDE	1				
017		232830-3	TORSION SPRING 12	1				
018		650049-6	SWITCH C3JR-1A-PAXD5	1				
019		620N40-2	CONTROLLER	1				
020		620N42-8	SWITCH CIRCUIT COMPLETE	1				
	C10	8056J6-7	INDICATION LABEL	1				
021		252286-4	COLLARED HEX.LOCK NUT M5-8	1				
022		240237-9	FAN 110	1				
023		413W41-9	MOTOR HOUSING COVER	1				
024		266130-9	TAPPING SCREW BIND PT 3X16	4				
025		210040-2	BALL BEARING 698LLU	1				
026		519639-3	ROTOR ASS'Y	1			DS817	
	D10		INC. 25,27				DS817	
026-1		519639-3	ROTOR ASS'Y	1	O	DS817		
	D10		INC. 25,27			DS817		
027		210022-4	BALL BEARING 626DDW	1				
028		629C55-0	STATOR	1				
029		424721-4	RUBBER RING 115	1				
030		413W35-4	MOTOR HOUSING	1				
031		424721-4	RUBBER RING 115	1				
032		424194-1	RUBBER RING 8	1				
033		422879-3	GROMMET	1				
034		413W36-2	CAP	1				
035		266130-9	TAPPING SCREW BIND PT 3X16	3				
036		1830H7-8	HOUSING SET	1			DV738	
	C10	8011Y4-4	CAUTION LABEL	1			DV738	
	D10		INC. 13				DV738	
036-1		1830H7-8	HOUSING SET	1	O	DV738		
	C10	8012T7-9	CAUTION LABEL	1	O	DV738		
	D10		INC. 13			DV738		
037		266326-2	TAPPING SCREW 4X18	12				
038		8143N3-2	UB003C NAME PLTE	1				
039		807950-8	SOUND 95DB LABEL	1				
040		412757-5	FRONT PIPE	1				
041		413W42-7	END NOZZLE 72	1				
A01		122F94-2	BAND ASSEMBLY	1				
F01		191L96-5	ADAPTER PIPE 85-72 SET	1		Z54182		
F02		197889-6	FLAT NOZZLE SET	1		Z54182		

Z:UB003CZ(N)

Interchange
O : Yes
X : No
< : the new part can be substituted for the current.
> : the current part can be substituted for the new.
S : Interchangeable as a set.