HK	HONG KONG

Diagram / Parts List

UB003G

CORDLESS BLOWER



2025/10

(HK) UB003G / CORDLESS BLOWER

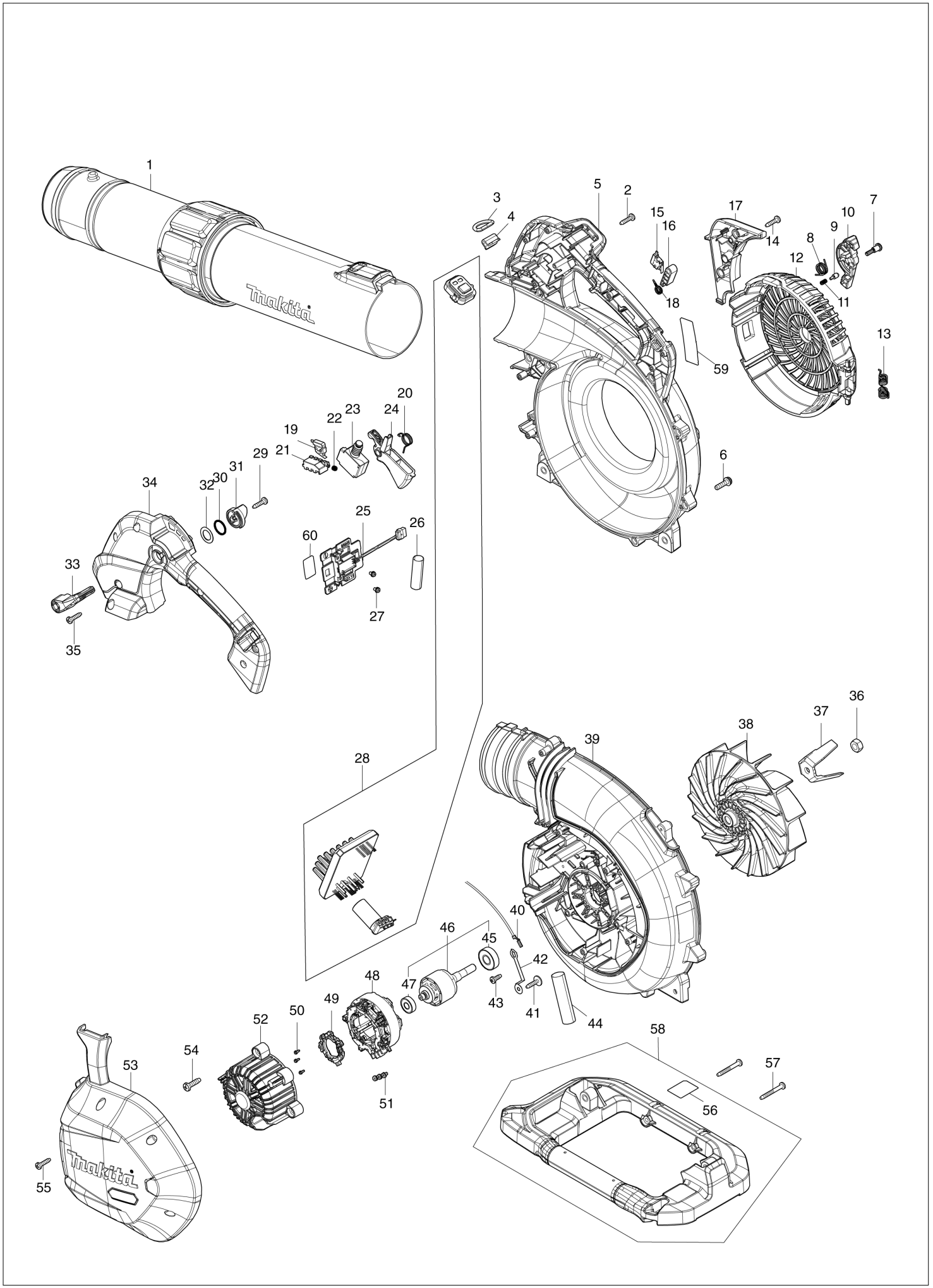

HK | HONG KONG

UB003G / CORDLESS BLOWER

Item	Sub	Parts No.	Parts Description	Qty	I/C	E/C No.	Close No.	Remark
001		122J57-2	BLOWER PIPE ASSEMBLY	1				
002		266326-2	TAPPING SCREW 4X18	7				
003		327742-4	D RING 20	1				
004		347783-4	RING SUPPORT	1				
005		1832A0-5	VOLUTE CASE SET	1				
	C10	8093Y9-0	CAUTION LABEL	1				
	D10		INC. 39					
006		911233-1	PAN HEAD SCREW M5X20	2				
007		265090-2	+ PAN HEAD SCREW M4X20	1				
008		232589-2	TORSION SPRING 12	1				
009		4134F6-9	PIN	1				
010		4133P2-1	LOCK LEVER	1				
011		233438-6	COMPRESSION SPRING 4	1				
012		4133P3-9	FAN COVER	1				
013		232966-8	TORSION SPRING 8	1				
014		266326-2	TAPPING SCREW 4X18	2				
015		632W81-0	SWITCH UNIT	1				
016		4133P0-5	PUSHER B	1				
017		4133P1-3	FIXED COVER	1				
018		232753-5	TORSION SPRING 8	1				
019		632W81-0	SWITCH UNIT	1				
020		232830-3	TORSION SPRING 12	1				
021		4133N8-5	PUSHER A	1				
022		233118-4	COMPRESSION SPRING 4	1				
023		650077-1	SWITCH	1				
024		413W37-0	SWITCH LEVER	1				
025		632T07-4	TERMINAL UNIT	1				
026		683A50-2	POLYETHYLENE TUBE 11-40	1				
027		652031-1	PAN HEAD SCREW M3X6	2				
028		620S52-5	CONTROLLER	1				
029		266326-2	TAPPING SCREW 4X18	1				
030		213154-6	O RING 14	1				
031		412754-1	LINK	1				
032		253798-0	FLAT WASHER 13	1				
033		413W40-1	CONTROL LEVER	1				
034		4133N0-1	HANDLE L	1				
035		266326-2	TAPPING SCREW 4X18	7				
036		252154-1	HEX. NUT M8-13	1				
037		347E24-8	SHREDDER	1				
038		240265-4	FAN 160	1				
039		1832A0-5	VOLUTE CASE SET	1				
	C10	8093Y9-0	CAUTION LABEL	1				
	D10		INC. 5					
040		638B15-5	LEAD UNIT	1				
041		265620-9	TAPPING SCREW FLANGE 4X18	2				
042		347E25-6	EARTH PLATE	1				
043		266427-6	TAPPING SCREW 4X12	1				
044		683A70-6	POLYETHYLENE TUBE 14-60	1				
045		210059-1	BALL BEARING 6000DDW	1				
046		519922-8	ROTOR ASS'Y	1				
	D10		INC. 45,47					
047		210017-7	BALL BEARING 607DDW	1				
048		629D50-6	STATOR	1				
049		620F73-9	SENSOR UNIT	1				
050		652119-7	PAN HEAD SCREW M2X6	3				
051		652069-6	FLAT HEAD SCREW M3X6	3				
052		4133N3-5	MOTOR HOUSING	1				
053		137368-2	MOTOR COVER ASSEMBLY	1				
	C10	263005-3	RUBBER PIN 6	2				
054		266021-4	TAPPING SCREW 5X20	3				
055		266326-2	TAPPING SCREW 4X18	6				
056		8094L0-3	INDICATION LABEL	1				
057		266351-3	TAPPING SCREW 4X35	2				
058		137414-1	SUB HANDLE ASS'Y	1				
	D10		INC. 56					

Z:UB003GZ(N)

Interchange
O : Yes
X : No
< : the new part can be substituted for the current.
> : the current part can be substituted for the new.
S : Interchangeable as a set.

HK | HONG KONG

UB003G / CORDLESS BLOWER

Item	Sub	Parts No.	Parts Description	Qty	I/C	E/C No.	Close No.	Remark
059		8153N3-5	UB003G NAME PLATE	1				
060		8153N5-1	UB003G SERIAL NO. LABEL	1				
A01		122H18-0	BAND ASSEMBLY	1				
A02		1916T9-0	VACUUM KIT SET	1				
	C10	122J58-0	BENT PIPE ASSEMBLY	1				
	C20	1413M5-1	VACUUM PIPE A COMPLETE	1				
	C30	162E22-9	DUST BAG	1				
	C40	266743-6	HEX.SOCKET HEAD BOLT M5X20	1				
	C50	4133P6-3	VACUUM PIPE B	1				
	C60	783202-0	HEX. WRENCH 4	1				
A03		1916V7-8	FLAT NOZZLE SET	1				
E01		8094K9-8	SOUND LABEL	1				
F01		191B03-8	GUTTER NOZZLE SET	1				
F02		191L13-5	ADAPTER PIPE 80-72 SET	1				
F03		191P40-6	DUST BAG SET	1				
F04		1916T9-0	VACUUM KIT SET	1				
F05		1916V7-8	FLAT NOZZLE SET	1				

Z:UB003GZ(N)

Interchange
O : Yes
X : No
< : the new part can be substituted for the current.
> : the current part can be substituted for the new.
S : Interchangeable as a set.