ENGLISH: Original instructions

INSTRUCTION MANUAL

Cordless Blower

UB003G

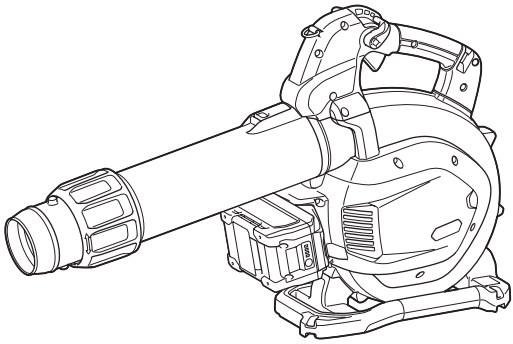

Read before use.

SPECIFICATIONS

Model:		UB003G
Capacities	Air volume	0 - 13.8 m^3/min
	Air speed (average)	0 - 56 m/s
	Air speed (max.)	0 - 68 m/s
Dimensions (L x W x H) *1		830 mm x 201 mm x 400 mm
Rated voltage		D.C. 36 V - 40 V max
Net weight (Blower assembly *2)	*4	3.7 kg
	*5	4.3 - 5.6 kg
Net weight (Vacuum assembly *3)	*4	4.8 kg
	*5	5.5 - 6.7 kg
Protection degree		IPX4

- Due to our continuing program of research and development, the specifications herein are subject to change without notice.
- Specifications may differ from country to country.

*1. With pipes at maximum length (no vacuum kit).
*2. With blower pipe, end nozzle and flat nozzle. Without suction pipe, suction nozzle, elbow pipe, dust bag and shoulder harness.
*3. With suction pipe, suction nozzle, elbow pipe, dust bag and shoulder harness. Without blower pipe, end nozzle and flat nozzle.
*4. Weight without any optional accessories and battery cartridge(s).
*5. The net weight value includes the lightest and heaviest combination of the attachment(s) for normal and safe use and battery cartridge(s) which are specified in the instruction manual.

Applicable battery cartridge and charger

Battery cartridge	BL4020 / BL4025 / BL4040 / BL4040F* / BL4050F* / BL4080F* / BL4080H* * : Recommended battery
Charger	DC40RA / DC40RB / DC40RC / DC40WA / BCC01 / BCC02

- Some of the battery cartridges and chargers listed above may not be available depending on your region of residence.

⚠***WARNING:*** **Only use the battery cartridges and chargers listed above.** Use of any other battery cartridges and chargers may cause injury and/or fire.

Applicable cord connected power source

Portable power pack	PDC01 / PDC1200 / PDC1500

- The cord connected power source(s) listed above may not be available depending on your region of residence.
- Before using the cord connected power source, read instruction and cautionary markings on them.

Symbols

The followings show the symbols which may be used for the equipment. Be sure that you understand their meaning before use.

	Take particular care and attention.
	Read instruction manual.
	Keep hands away from rotating parts.
	Long hair may cause entanglement accident.
	Keep bystanders away.
	Wear eye and ear protection.
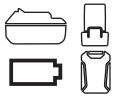	A representative battery applicable to this product.

Ni-MH Li-ion	Only for EU countries Due to the presence of hazardous components in the equipment, waste electrical and electronic equipment, accumulators and batteries may have a negative impact on the environment and human health. Do not dispose of electrical and electronic appliances or batteries with household waste! In accordance with the European Directive on waste electrical and electronic equipment and on accumulators and batteries and waste accumulators and batteries, as well as their adaptation to national law, waste electrical equipment, batteries and accumulators should be stored separately and delivered to a separate collection point for municipal waste, operating in accordance with the regulations on environmental protection. This is indicated by the symbol of the crossed-out wheeled bin placed on the equipment.
	Guaranteed sound power level according to EU Outdoor Noise Directive.
	Sound power level according to Australia NSW Noise Control Regulation.

Intended use

The machine is intended for blowing and vacuuming.

Noise

The typical A-weighted noise level determined according to EN IEC 62841-4-6:
Sound pressure level (L_{pA}) : 86.8 dB (A)
Uncertainty (K) : 1.7 dB (A)
Sound power level (L_{WA}) : 97.3 dB (A)
Uncertainty (K) : 1.8 dB (A)

NOTE: The declared noise emission value(s) has been measured in accordance with a standard test method and may be used for comparing one tool with another.

NOTE: The declared noise emission value(s) can also be used in a preliminary assessment of exposure.

⚠*WARNING:* Wear ear protection.

⚠*WARNING:* The noise emission during actual use of the power tool can differ from the declared total value(s) depending on the ways in which the tool is used.

⚠*WARNING:* Be sure to identify safety measures to protect the operator that are based on an estimation of exposure in the actual conditions of use (taking account of all parts of the operating cycle such as the times when the tool is switched off and when it is running idle in addition to the trigger time).

Vibration

The continuous vibration total value (tri-axial vector sum) determined according to EN IEC 62841-4-6:
Vibration emission (a_h) : 2.0 m/s^2
Uncertainty (K) : 1.5 m/s^2

NOTE: The declared vibration total value(s) has been measured in accordance with a standard test method and may be used for comparing one tool with another.

NOTE: The declared vibration total value(s) can also be used in a preliminary assessment of exposure.

⚠*WARNING:* The vibration emission during actual use of the power tool can differ from the declared total value(s) depending on the ways in which the tool is used.

⚠*WARNING:* Be sure to identify safety measures to protect the operator that are based on an estimation of exposure in the actual conditions of use (taking account of all parts of the operating cycle such as the times when the tool is switched off and when it is running idle in addition to the trigger time).

Declarations of Conformity

For European countries only

The Declarations of conformity are included in Annex A to this instruction manual.

SAFETY WARNINGS

General power tool safety warnings

⚠*WARNING* Read all safety warnings, instructions, illustrations and specifications provided with this power tool. Failure to follow all instructions listed below may result in electric shock, fire and/or serious injury.

Save all warnings and instructions for future reference.

The term "power tool" in the warnings refers to your mains-operated (corded) power tool or battery-operated (cordless) power tool.

Work area safety

1. **Keep work area clean and well lit.** Cluttered or dark areas invite accidents.
2. **Do not operate power tools in explosive atmospheres, such as in the presence of flammable liquids, gases or dust.** Power tools create sparks which may ignite the dust or fumes.
3. **Keep children and bystanders away while operating a power tool.** Distractions can cause you to lose control.

Electrical safety

1. **Power tool plugs must match the outlet. Never modify the plug in any way. Do not use any adapter plugs with earthed (grounded) power tools.** Unmodified plugs and matching outlets will reduce risk of electric shock.
2. **Avoid body contact with earthed or grounded surfaces, such as pipes, radiators, ranges and refrigerators.** There is an increased risk of electric shock if your body is earthed or grounded.
3. **Do not expose power tools to rain or wet conditions.** Water entering a power tool will increase the risk of electric shock.
4. **Do not abuse the cord. Never use the cord for carrying, pulling or unplugging the power tool. Keep cord away from heat, oil, sharp edges or moving parts.** Damaged or entangled cords increase the risk of electric shock.
5. **When operating a power tool outdoors, use an extension cord suitable for outdoor use.** Use of a cord suitable for outdoor use reduces the risk of electric shock.
6. **If operating a power tool in a damp location is unavoidable, use a residual current device (RCD) protected supply.** Use of an RCD reduces the risk of electric shock.
7. **Power tools can produce electromagnetic fields (EMF) that are not harmful to the user.** However, users of pacemakers and other similar medical devices should contact the maker of their device and/or doctor for advice before operating this power tool.

Personal safety

1. **Stay alert, watch what you are doing and use common sense when operating a power tool. Do not use a power tool while you are tired or under the influence of drugs, alcohol or medication.** A moment of inattention while operating power tools may result in serious personal injury.
2. **Use personal protective equipment. Always wear eye protection.** Protective equipment such as a dust mask, non-skid safety shoes, hard hat or hearing protection used for appropriate conditions will reduce personal injuries.
3. **Prevent unintentional starting. Ensure the switch is in the off-position before connecting to power source and/or battery pack, picking up or carrying the tool.** Carrying power tools with your finger on the switch or energising power tools that have the switch on invites accidents.
4. **Remove any adjusting key or wrench before turning the power tool on.** A wrench or a key left attached to a rotating part of the power tool may result in personal injury.
5. **Do not overreach. Keep proper footing and balance at all times.** This enables better control of the power tool in unexpected situations.
6. **Dress properly. Do not wear loose clothing or jewellery. Keep your hair and clothing away from moving parts.** Loose clothes, jewellery or long hair can be caught in moving parts.
7. **If devices are provided for the connection of dust extraction and collection facilities, ensure these are connected and properly used.** Use of dust collection can reduce dust-related hazards.
8. **Do not let familiarity gained from frequent use of tools allow you to become complacent and ignore tool safety principles.** A careless action can cause severe injury within a fraction of a second.
9. **Always wear protective goggles to protect your eyes from injury when using power tools. The goggles must comply with ANSI Z87.1 in the USA, EN 166 in Europe, or AS/NZS 1336 in Australia/New Zealand. In Australia/New Zealand, it is legally required to wear a face shield to protect your face, too.**

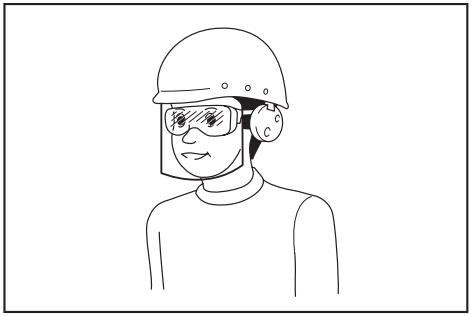

It is an employer's responsibility to enforce the use of appropriate safety protective equipments by the tool operators and by other persons in the immediate working area.

Power tool use and care

1. **Do not force the power tool. Use the correct power tool for your application.** The correct power tool will do the job better and safer at the rate for which it was designed.
2. **Do not use the power tool if the switch does not turn it on and off.** Any power tool that cannot be controlled with the switch is dangerous and must be repaired.
3. **Disconnect the plug from the power source and/or remove the battery pack, if detachable, from the power tool before making any adjustments, changing accessories, or storing power tools.** Such preventive safety measures reduce the risk of starting the power tool accidentally.
4. **Store idle power tools out of the reach of children and do not allow persons unfamiliar with**

the power tool or these instructions to operate the power tool. Power tools are dangerous in the hands of untrained users.

5. **Maintain power tools and accessories. Check for misalignment or binding of moving parts, breakage of parts and any other condition that may affect the power tool's operation. If damaged, have the power tool repaired before use.** Many accidents are caused by poorly maintained power tools.
6. **Keep cutting tools sharp and clean.** Properly maintained cutting tools with sharp cutting edges are less likely to bind and are easier to control.
7. **Use the power tool, accessories and tool bits etc. in accordance with these instructions, taking into account the working conditions and the work to be performed.** Use of the power tool for operations different from those intended could result in a hazardous situation.
8. **Keep handles and grasping surfaces dry, clean and free from oil and grease.** Slippery handles and grasping surfaces do not allow for safe handling and control of the tool in unexpected situations.
9. **When using the tool, do not wear cloth work gloves which may be entangled.** The entanglement of cloth work gloves in the moving parts may result in personal injury.

Battery tool use and care

1. **Recharge only with the charger specified by the manufacturer.** A charger that is suitable for one type of battery pack may create a risk of fire when used with another battery pack.
2. **Use power tools only with specifically designated battery packs.** Use of any other battery packs may create a risk of injury and fire.
3. **When battery pack is not in use, keep it away from other metal objects, like paper clips, coins, keys, nails, screws or other small metal objects, that can make a connection from one terminal to another.** Shorting the battery terminals together may cause burns or a fire.
4. **Under abusive conditions, liquid may be ejected from the battery; avoid contact. If contact accidentally occurs, flush with water. If liquid contacts eyes, additionally seek medical help.** Liquid ejected from the battery may cause irritation or burns.
5. **Do not use a battery pack or tool that is damaged or modified.** Damaged or modified batteries may exhibit unpredictable behaviour resulting in fire, explosion or risk of injury.
6. **Do not expose a battery pack or tool to fire or excessive temperature.** Exposure to fire or temperature above 130 °C may cause explosion.
7. **Follow all charging instructions and do not charge the battery pack or tool outside the temperature range specified in the instructions.** Charging improperly or at temperatures outside the specified range may damage the battery and increase the risk of fire.

Service

1. **Have your power tool serviced by a qualified repair person using only identical replacement parts.** This will ensure that the safety of the power tool is maintained.
2. **Never service damaged battery packs.** Service of battery packs should only be performed by the manufacturer or authorized service providers.
3. **Follow instruction for lubricating and changing accessories.**

Cordless garden blower/vacuum safety warnings

1. **Do not use the machine in bad weather conditions, especially when there is a risk of lightning.** This decreases the risk of being struck by lightning.
2. **Check the debris collector frequently for wear or deterioration.** A worn or damaged debris collector may increase the risk of personal injury.
3. **Wear eye protection and ear protection.** Adequate protective equipment will reduce the risk of personal injury.
4. **While operating the machine, always wear non-slip and protective footwear. Do not operate the machine when barefoot or wearing open sandals.** This reduces the risk of injury to the feet.
5. **Do not wear loose fitting clothing or articles such as scarves, strings, chains, ties, etc., that could get drawn into the air inlets. Tie back or cover long hair to make sure it does not get drawn into the air inlets.** If any of these items are drawn into the air inlets, it can increase the risk of personal injury.
6. **Keep bystanders away while operating the machine.** Thrown **debris** can increase the risk of personal injury.
7. **Do not use in vacuum mode without the debris collector in place.** Thrown objects can increase the risk of personal injury.
8. **Never point the blower nozzle in the direction of people or pets or in the direction of windows. Use extra caution when blowing debris near solid objects, such as trees, automobiles and walls that can cause debris to ricochet.** Thrown objects can damage property and increase the risk of personal injury.
9. **Do not use the machine to pick up or blow anything that is burning or smoking, such as cigarettes, matches or hot ashes.** These ignition sources may increase the risk of fire.
10. **Never blow or vacuum dangerous materials, such as nails, fragments of glass, or blades.**
11. **Do not vacuum water or other liquids or immerse any part of the machine in liquid.** Water entering the machine may increase the risk of electric shock.
12. **Do not vacuum stones, gravel, metal or broken glass.** The fan wheel can get damaged and may increase the risk of personal injury.
13. **Do not touch the fan while still in motion. Turn off the machine and wait until the fan stops before removing any part that may give access to the fan.** This reduces the risk of injury from moving parts.

14. **When clearing jammed material or servicing the machine, make sure the power switch is off.** Unexpected starting of the machine while clearing jammed material or servicing may result in serious personal injury.
15. **Incoming foreign substance may block the air channels and laden air flows. Remove any obstacles in the air path if the blowing/vacuuming performance is being affected.**
16. **Use this machine at ground level, not on ladders or any unstable support.**
17. **When the machine strikes a hard object or if there appears to be excessive vibration, inspect the machine for damage.**
18. **Switch off the machine and remove the battery cartridge and make sure that all moving parts have come to a complete stop**
    - **whenever you leave the machine.**
    - **before clearing blockages.**
    - **before checking, cleaning or working on the machine.**
    - **if the machine starts to vibrate abnormally.**
    - **whenever you convert the machine from blower to vacuum, and vice versa.**
19. **When using the machine for blower operation, never blow debris in the direction of bystanders. When using the machine for vacuuming operation, be careful not to blow debris in the direction of bystanders with the exhausted wind from the dust bag.**
20. **Always make sure that the ventilation openings are kept clear of debris.**
21. **Clean the machine before storage.**
22. **Do not use the machine in bad weather where visibility is limited.** Failure to do so may cause fall or incorrect operation due to low visibility.
23. **Avoid operating the blower for a long time in low temperature environment.**
24. **When you use the machine on muddy ground, wet slope, or slippery place, pay attention to your footing.**
25. **Do not leave the machine unattended outdoors in the rain.**
26. **When storing the machine, avoid direct sunlight and rain, and store it in a place where it does not get hot or humid.**

Electrical and battery safety

1. **Avoid dangerous environment. Don't use the tool in damp or wet locations or expose it to rain. Water entering the tool will increase the risk of electric shock.**
2. **Do not open or mutilate the battery(ies).** Released electrolyte is corrosive and may cause damage to the eyes or skin. It may be toxic if swallowed.
3. **Do not replace the battery with wet hands.**
4. **Do not leave the battery in the rain, nor charge, use, or store the battery in a damp or wet place.**
5. **Do not wet the terminal of battery with liquid such as water, or submerge the battery.** If the terminal gets wet or liquid enters inside of battery, the battery may be short circuited and there is a risk of overheat, fire, or explosion.
6. **After removing the battery from the tool or charger, be sure to attach the battery cover to the battery and store it in a dry place.**

SAVE THESE INSTRUCTIONS.

⚠*WARNING:* DO NOT let comfort or familiarity with product (gained from repeated use) replace strict adherence to safety rules for the subject product.

MISUSE or failure to follow the safety rules stated in this instruction manual may cause serious personal injury.

Important safety instructions for battery cartridge

1. **Before using battery cartridge, read all instructions and cautionary markings on (1) battery charger, (2) battery, and (3) product using battery.**
2. **Do not disassemble or tamper with the battery cartridge.** It may result in a fire, excessive heat, or explosion.
3. **If operating time has become excessively shorter, stop operating immediately. It may result in a risk of overheating, possible burns and even an explosion.**
4. **If electrolyte gets into your eyes, rinse them out with clear water and seek medical attention right away. It may result in loss of your eyesight.**
5. **Do not short the battery cartridge:**
   (1) **Do not touch the terminals with any conductive material.**
   (2) **Avoid storing battery cartridge in a container with other metal objects such as nails, coins, etc.**
   (3) **Do not expose battery cartridge to water or rain.**

   A battery short can cause a large current flow, overheating, possible burns and even a breakdown.
6. **Do not store and use the tool and battery cartridge in locations where the temperature may reach or exceed 50 °C (122 °F).**
7. **Do not incinerate the battery cartridge even if it is severely damaged or is completely worn out. The battery cartridge can explode in a fire.**
8. **Do not nail, cut, crush, throw, drop the battery cartridge, or hit against a hard object to the battery cartridge.** Such conduct may result in a fire, excessive heat, or explosion.
9. **Do not use a damaged battery.**
10. **The contained lithium-ion batteries are subject to the Dangerous Goods Legislation requirements.**
    For commercial transports e.g. by third parties, forwarding agents, special requirement on packaging and labeling must be observed.
    For preparation of the item being shipped, consulting an expert for hazardous material is required.

Please also observe possibly more detailed national regulations.
Tape or mask off open contacts and pack up the battery in such a manner that it cannot move around in the packaging.

11. **When disposing the battery cartridge, remove it from the tool and dispose of it in a safe place. Follow your local regulations relating to disposal of battery.**
12. **Use the batteries only with the products specified by Makita.** Installing the batteries to non-compliant products may result in a fire, excessive heat, explosion, or leak of electrolyte.
13. **If the tool is not used for a long period of time, the battery must be removed from the tool.**
14. **During and after use, the battery cartridge may take on heat which can cause burns or low temperature burns. Pay attention to the handling of hot battery cartridges.**
15. **Do not touch the terminal of the tool immediately after use as it may get hot enough to cause burns.**
16. **Do not allow chips, dust, or soil stuck into the terminals, holes, and grooves of the battery cartridge.** It may cause heating, catching fire, burst and malfunction of the tool or battery cartridge, resulting in burns or personal injury.
17. **Unless the tool supports the use near high-voltage electrical power lines, do not use the battery cartridge near high-voltage electrical power lines.** It may result in a malfunction or breakdown of the tool or battery cartridge.
18. **Keep the battery away from children.**

SAVE THESE INSTRUCTIONS.

⚠*CAUTION:* Only use genuine Makita batteries. Use of non-genuine Makita batteries, or batteries that have been altered, may result in the battery bursting causing fires, personal injury and damage. It will also void the Makita warranty for the Makita tool and charger.

NOTICE: Makita is not responsible for any accidents resulting from the use of non-genuine Makita batteries or batteries that have been modified. Genuine Makita batteries have been rigorously evaluated for compatibility with Makita tools and chargers, in line with applicable legislation and safety standards.

Tips for maintaining maximum battery life

1. **Charge the battery cartridge before completely discharged. Always stop tool operation and charge the battery cartridge when you notice less tool power.**
2. **Never recharge a fully charged battery cartridge. Overcharging shortens the battery service life.**
3. **Charge the battery cartridge with room temperature at 10 °C - 40 °C (50 °F - 104 °F). Let a hot battery cartridge cool down before charging it.**
4. **When not using the battery cartridge, remove it from the tool or the charger.**
5. **Charge the battery cartridge if you do not use it for a long period (more than six months).**

ASSEMBLY

⚠*CAUTION:* Always be sure that the machine is switched off and the battery cartridge is removed before carrying out any work on the machine.

***NOTICE:* Before operating the machine, be sure to completely assemble the machine.** Otherwise, the machine does not work.

Assembly for blowing

Installing and removing blower pipe

To install the blower pipe, slide the blower pipe onto the blowing outlet of the machine until the latch locks the connection.

To remove the blower pipe, slide the blower pipe off the machine while pressing down the latch lever on the blower pipe.

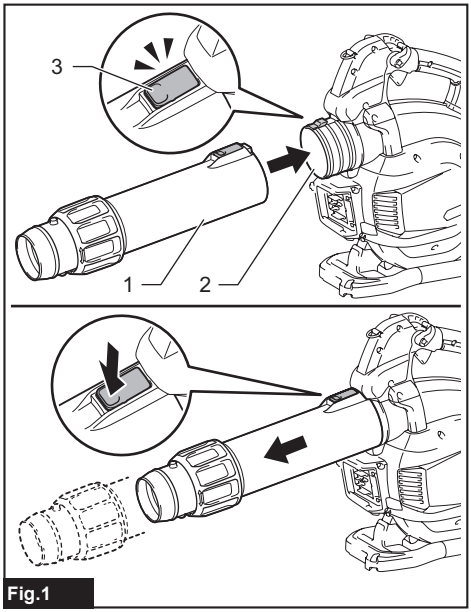

Fig.1

► **1.** Blower pipe **2.** Blowing outlet **3.** Latch

Adjust the blower pipe length according to your needs. Loosen the lock ring by turning it in “A” direction shown in the figure. Slide the end nozzle in and out and then tighten the lock ring in “B” direction to secure the position.

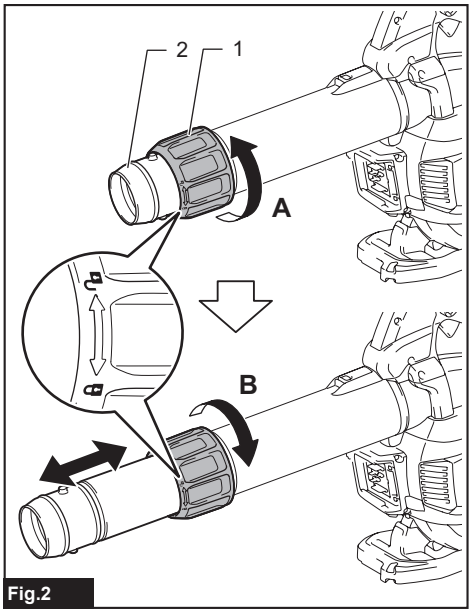

Fig.2

► **1.** Lock ring **2.** End nozzle

NOTE: Tighten the lock ring firmly to ensure a secure fit.

Installing and removing flat nozzle

Align the guide groove on the flat nozzle with the fitting projection on the end nozzle. Slide and turn the flat nozzle back and forward along the guide groove to secure it in your desired position with a click.

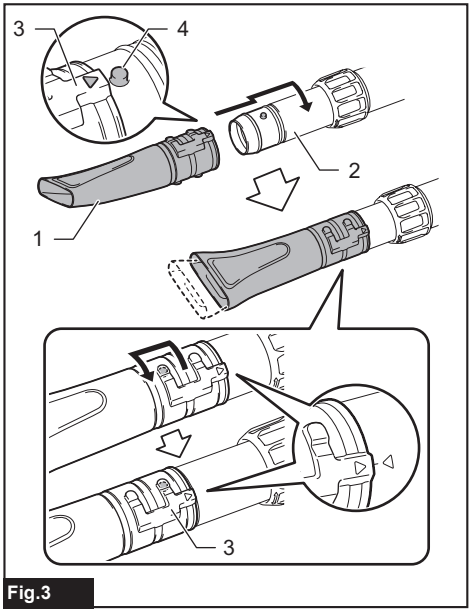

Fig.3

► **1.** Flat nozzle **2.** End nozzle **3.** Guide groove **4.** Fitting projection

To remove the flat nozzle, perform the installation procedure in reverse.

Installing gutter nozzle set

Optional accessory

The gutter nozzle can be installed on the blower. The adapter pipe designed exclusively for this model is required to install the gutter nozzle.

1. Align the guide groove on the adapter pipe with the fitting projection on the end nozzle. Slide and turn the adapter pipe along the guide groove to secure it in place with a click.

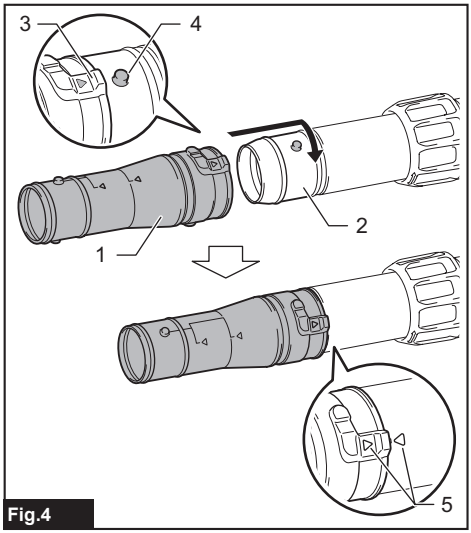

Fig.4

► **1.** Adapter pipe **2.** End nozzle **3.** Guide groove **4.** Fitting projection **5.** Triangle symbols

NOTE: Be sure to lock the adapter pipe securely so the two triangle symbols on the adapter pipe and that on the end nozzle point at each other.

2. Loosen small hose clamps by unscrewing. Place the hose clamps around the adapter pipe through their openings. Tighten one of the hose clamps (small) to clamp the adapter pipe and end nozzle together.

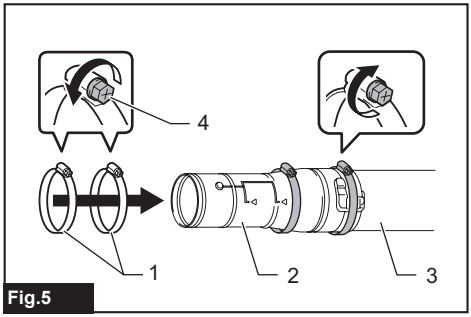

Fig.5

► **1.** Hose clamps (small) **2.** Adapter pipe **3.** End nozzle **4.** Screw

3. Align the guide groove on the extension pipe with the fitting projection on the adapter pipe. Slide and turn the extension pipe along the guide groove to secure it in place with a click.

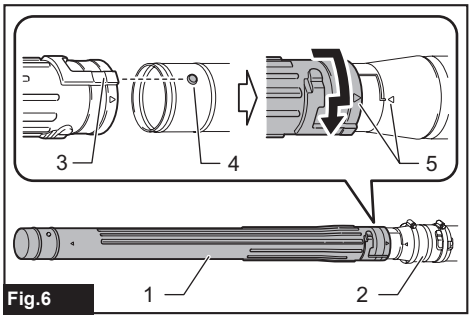

Fig.6

► **1.** Extension pipe **2.** Adapter pipe **3.** Guide groove **4.** Fitting projection **5.** Triangle symbols

NOTE: Be sure to lock the extension pipe securely so the two triangle symbols on the adapter pipe and that on the extension pipe point at each other.

4. Place the hose clamp (small) over the guide groove on the extension pipe. Tighten the hose clamp (small) to secure the assembly.

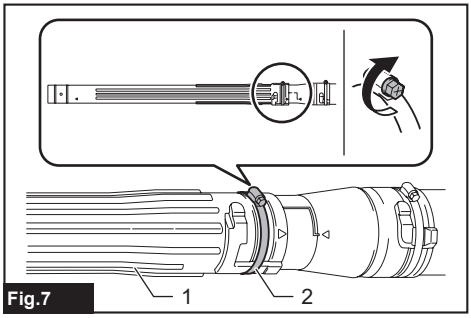

Fig.7

► **1.** Extension pipe **2.** Hose clamp (small)

5. Extend the blower's reach using extra extension pipes if necessary.

6. Prepare the end nozzle to make the desired blowing direction by turning its nozzle head.

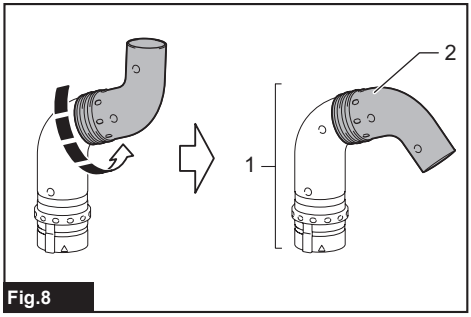

Fig.8

► **1.** End nozzle **2.** Nozzle head

7. Align the guide groove on the end nozzle with the fitting projection on the extension pipe. Slide the end nozzle all the way along the guide groove until it locks with a click.

Rotate the end nozzle and nozzle head according to your needs.

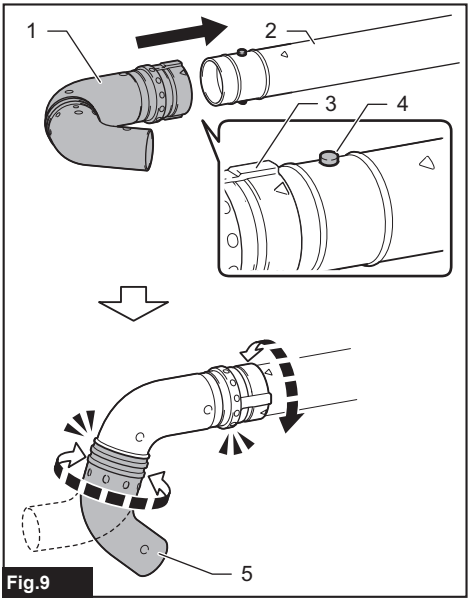

Fig.9

► **1.** End nozzle **2.** Extension pipe **3.** Guide groove **4.** Fitting projection **5.** Nozzle head

To disassemble the end nozzle, turn the end nozzle first to align the triangle symbols on the end nozzle and extension pipe. Then pull the end nozzle apart from the extension pipe.

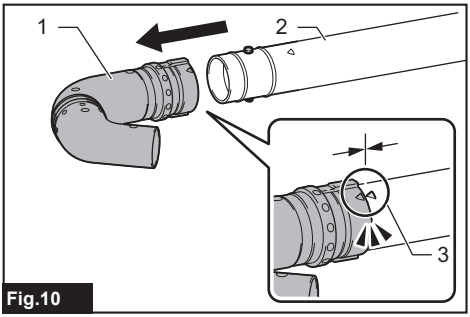

Fig.10

► **1.** End nozzle **2.** Extension pipe **3.** Triangle symbols

Attaching the shoulder harness

⚠***CAUTION:*** **When you use the machine in combination of the backpack-type power supply such as portable power pack, do not use the shoulder harness included in the machine package, but use the hanging band recommended by Makita.**

If you put on the shoulder harness included in the machine package and the shoulder harness of the backpack-type power supply at the same time, removing the machine or backpack-type power supply is difficult in case of an emergency, and it may cause an accident or injury. For the recommended hanging band, ask Makita Authorized Service Centers.

⚠***CAUTION:*** **When wearing a harness, make sure that no other wearable interferes with the release and removal of the harness.**

⚠***CAUTION:*** **Be sure to attach the hooks of the shoulder harness to the machine securely.** If the hooks are attached incompletely, they may come off and cause an injury.

⚠***CAUTION:*** **Be sure to use the shoulder harness dedicated to this machine.** Using other shoulder harness may cause an injury.

Attach the hooks of the shoulder harness to the machine as shown in the figure.
Adjust the shoulder harness to a comfortable working position by pulling and loosening the adjustment strap.

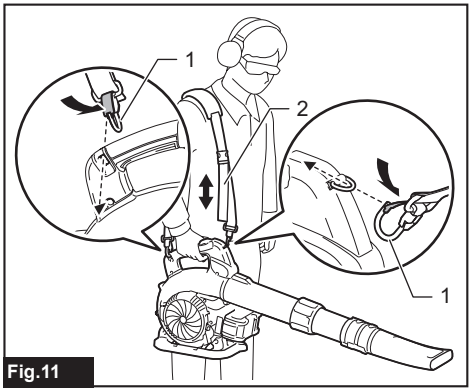

Fig.11

► **1.** Hook **2.** Adjustment strap

The shoulder harness features a means of quick release. Simply squeeze the sides of the buckle while holding the machine to release the machine from the shoulder harness.

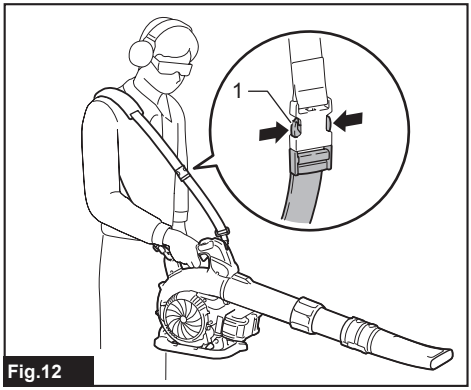

Fig.12

► **1.** Buckle

Assembly for vacuuming

⚠*CAUTION:* When performing the vacuuming operation, always attach the suction nozzle to the suction pipe.

⚠*CAUTION:* For safe operation, the suction nozzle cannot be removed from the suction pipe, once they are assembled. Do not remove the suction nozzle forcibly after the assembly. Otherwise, they may be damaged.

Installing and removing suction pipe and nozzle

1. Hold the suction nozzle with its triangle mark facing upward.

2. Insert the suction nozzle all the way into the suction pipe, aligning the two triangle marks together as shown in the figure.

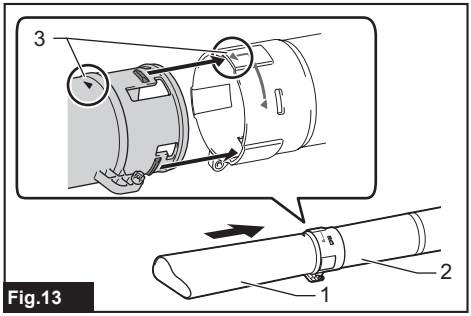

Fig.13

► **1.** Suction nozzle **2.** Suction pipe **3.** Triangle marks

3. Turn the suction pipe to the direction shown in the figure until the two triangle marks face to each other and the mating parts snap together into place.

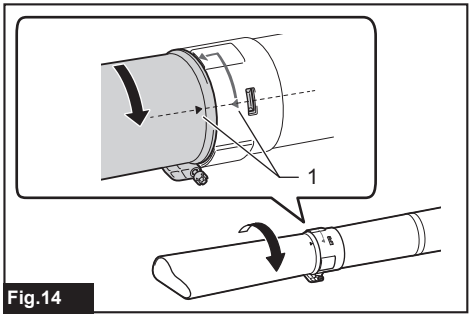

Fig.14

► **1.** Triangle marks

NOTE: Fit the two bolt holes tightly to line up.

4. Insert the retaining bolt into the bolt holes. Screw the bolt up to secure the assembly.

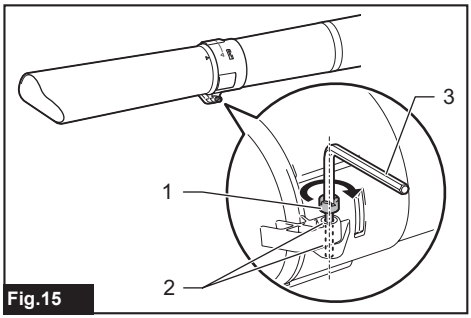

Fig.15

► **1.** Retaining bolt **2.** Bolt holes **3.** Hex wrench

5. Push the lock lever inward to release the fan cover lock. Open the fan cover.

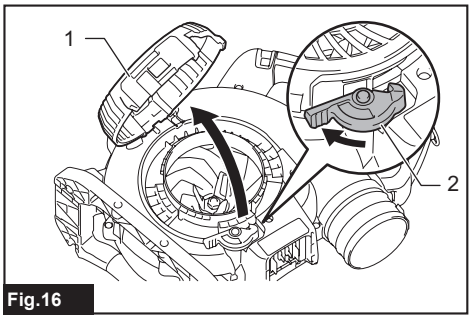

Fig.16

► **1.** Fan cover **2.** Lock lever

6. Place the suction pipe onto the suction inlet, aligning the unlock symbol ( ) on the suction pipe with the triangle mark on the suction inlet.

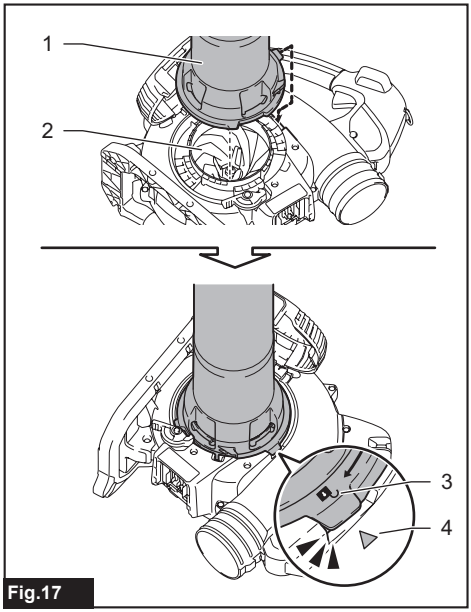

Fig.17

► **1.** Suction pipe **2.** Suction inlet **3.** Unlock symbol **4.** Triangle mark

7. Turn the suction pipe to the direction shown in the figure until the lock symbol ( ) on the suction pipe aligns with the triangle mark on the suction inlet.

The rotation locking tab sits in the slot on the housing to fully seat the suction pipe.

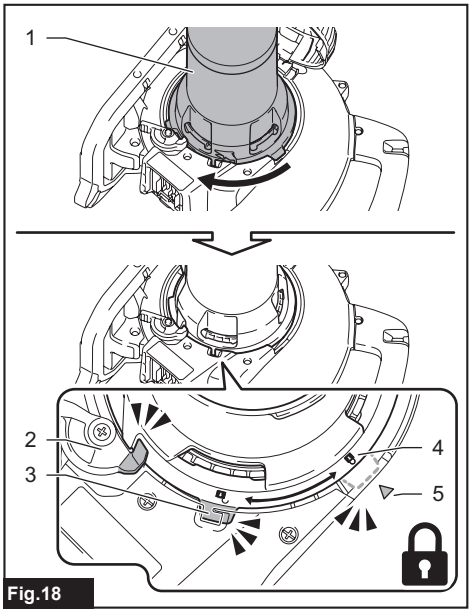

Fig.18

► **1.** Suction pipe **2.** Lock lever **3.** Rotation locking tab **4.** Lock symbol **5.** Triangle mark

NOTICE: **Turn the suction pipe fully until the lock lever secures the position with a click.**

To remove the suction pipe, perform the installation procedure in reverse.

NOTICE: **Before dismounting the suction pipe, push the lock lever inward until it is all the way out and sits in a released position.** The lock lever returns to the lock position by closing the fan cover after disassembly.

Installing and removing elbow pipe and dust bag

1. Insert the elbow pipe into the dust bag and tighten the belt to fix the dust bag as shown in the figure.

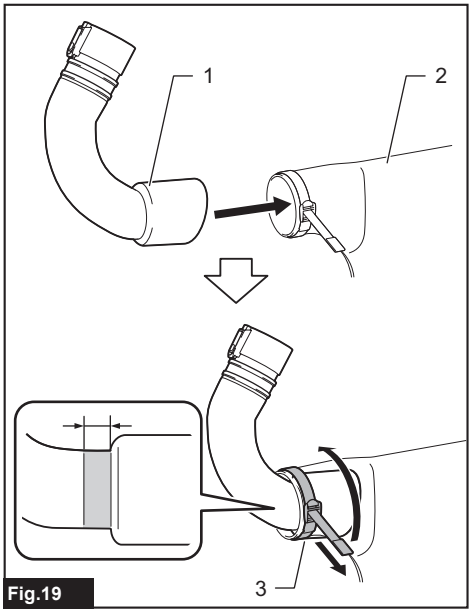

Fig.19

► **1.** Elbow pipe **2.** Dust bag **3.** Belt

2. Slide the elbow pipe onto the blowing outlet of the machine until the latch locks the connection.

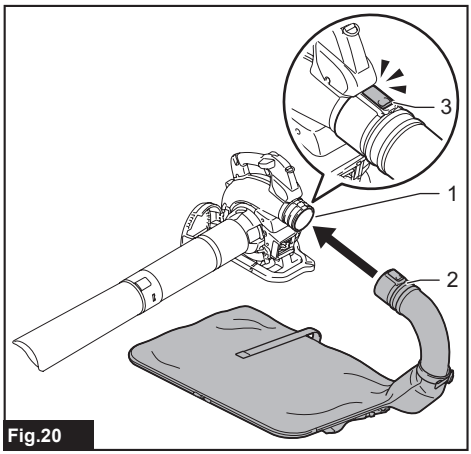

Fig.20

► **1.** Blowing outlet **2.** Elbow pipe **3.** Latch

3. Attach the hook of the dust bag to the sub handle.

Adjust the length of the strap, and then fold extra strap and fix it with hook and loop fastener.

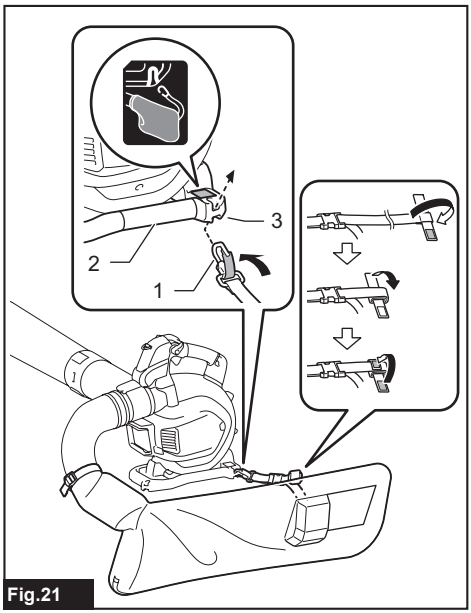

Fig.21

► **1.** Hook **2.** Sub handle **3.** Hanging hole

NOTE: An illustrated label is used to indicate the hanging hole position.

4. Attach the hooks of the shoulder harness to the carry handle and sub handle as shown in the figure.

Make sure that the buckle is on the side of the carry handle.

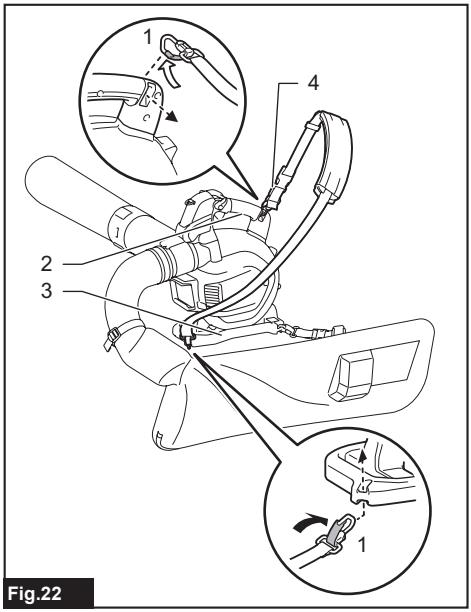

Fig.22

► **1.** Hook **2.** Carry handle **3.** Sub handle **4.** Buckle

The shoulder harness features a means of quick release. Simply squeeze the sides of the buckle to release the machine from the shoulder harness.

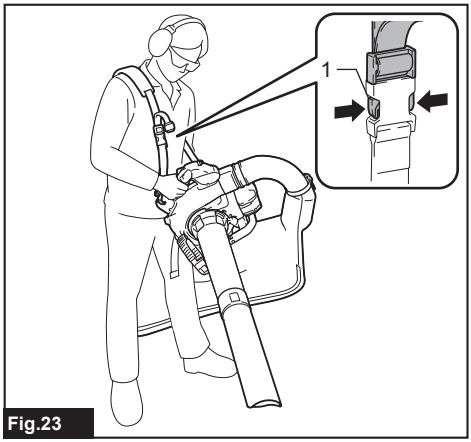

Fig.23

► **1.** Buckle

To remove the dust bag and elbow pipe, perform the installation procedure in reverse.

Installing small dust bag

Optional accessory

1. Open the fastener.

2. Insert the elbow pipe into the dust bag.

3. Close the fastener and fasten the buckle.

4. Tighten the belt to secure the dust bag.

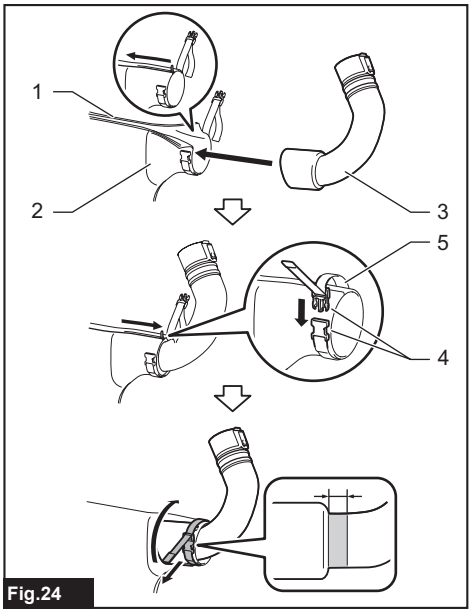

Fig.24

► **1.** Fastener **2.** Small dust bag **3.** Elbow pipe **4.** Buckle **5.** Belt

FUNCTIONAL DESCRIPTION

***CAUTION:* Always be sure that the machine is switched off and the battery cartridge is removed before adjusting or checking function on the machine.**

Installing or removing battery cartridge

***CAUTION:* Always switch off the machine before installing or removing of the battery cartridge.**

***CAUTION:* Hold the machine and the battery cartridge firmly when installing or removing battery cartridge.** Failure to hold the machine and the battery cartridge firmly may cause them to slip off your hands and result in damage to the machine and battery cartridge and a personal injury.

***CAUTION:* Always install the battery cartridge fully until the red indicator cannot be seen.** If not, it may accidentally fall out of the machine, causing injury to you or someone around you.

***CAUTION:* Do not install the battery cartridge forcibly.** If the cartridge does not slide in easily, it is not being inserted correctly.

To install the battery cartridge, align the tongue on the battery cartridge with the groove in the housing and slip it into place. Insert it all the way until it locks in place with a little click. If you can see the red indicator on the upper side of the button, it is not locked completely.

To remove the battery cartridge, slide it from the machine while sliding the button on the front of the cartridge.

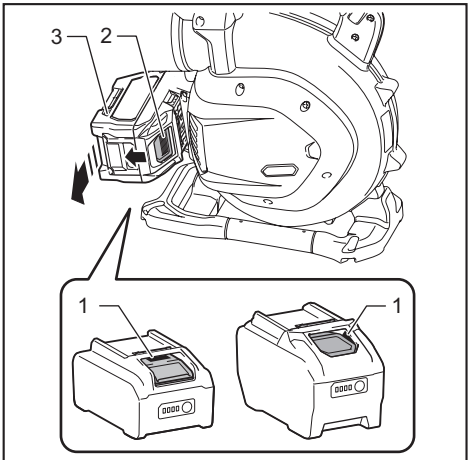

Fig.25

► **1.** Red indicator **2.** Button **3.** Battery cartridge

Indicating the remaining battery capacity

Press the check button on the battery cartridge to indicate the remaining battery capacity. The indicator lamps light up for a few seconds.

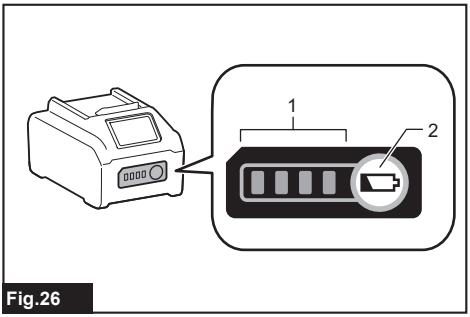

Fig.26

► **1.** Indicator lamps **2.** Check button

Indicator lamps			Remaining capacity
Lighted	Off	Blinking	
■	□	◪	
■ ■ ■ ■			75% to 100%
■ ■ ■ □			50% to 75%
■ ■ □ □			25% to 50%
■ □ □ □			0% to 25%
◪ □ □ □			Charge the battery.
■ ■ □ □ ↑↓ □ □ ■ ■			The battery may have malfunctioned.

NOTE: Depending on the conditions of use and the ambient temperature, the indication may differ slightly from the actual capacity.

NOTE: The first (far left) indicator lamp will blink when the battery protection system works.

Machine/battery protection system

The machine is equipped with a machine/battery protection system. This system automatically cuts off power to the motor to extend machine and battery life. The machine will automatically stop during operation if the machine or battery is placed under one of the following conditions:

Overload protection

When the machine or battery is operated in a manner that causes it to draw an abnormally high current, the machine automatically stops and the mode 2 lamp (high-mode) blinks in green. In this situation, turn the machine off and stop the application that caused the machine to become overloaded. Then turn the machine on to restart.

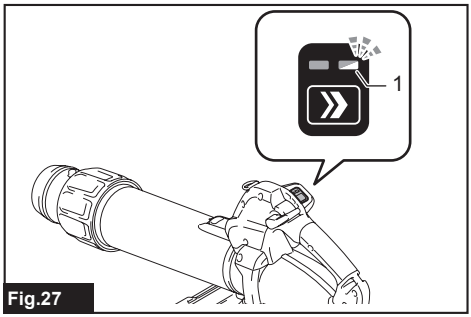

Fig.27

► **1.** Mode 2 lamp (high-mode)

Overheat protection

When the machine or battery is overheated, the machine stops automatically and the mode 2 lamp (high-mode) lights up in red. In this case, let the machine and battery cool down before turning the machine on again.

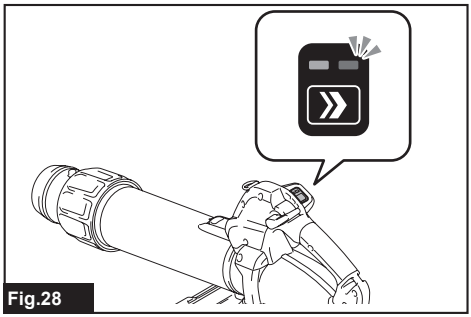

Fig.28

Overdischarge protection

When the battery capacity is not enough, the machine stops automatically and the mode 2 lamp (high-mode) blinks in red. In this case, remove the battery from the machine and charge the battery.

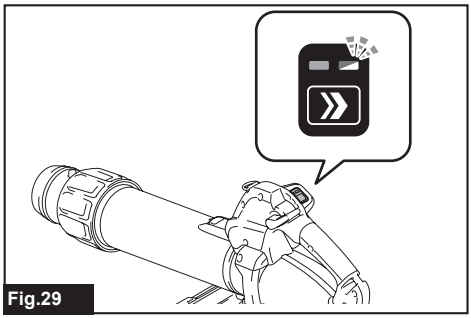

Fig.29

Switch action

⚠*WARNING:* Before installing the battery cartridge into the machine, always check to see that the switch trigger actuates properly and returns to the "OFF" position when released.

Pull the switch trigger to start the machine. The speed increases as you squeeze the switch trigger harder. Release the switch trigger to stop.

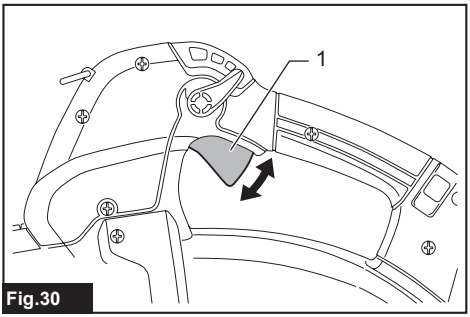

Fig.30

► **1.** Switch trigger

Mode switch

Two ranges of speed can be controlled by mode settings. Air volume in mode 1 (low-mode) becomes smaller than in mode 2 (high-mode). Select either of the two operation modes according to practical applications.

Press the mode button to toggle between mode 1 (low-mode) and mode 2 (high-mode) until the mode lamps indicate the mode you want to select.

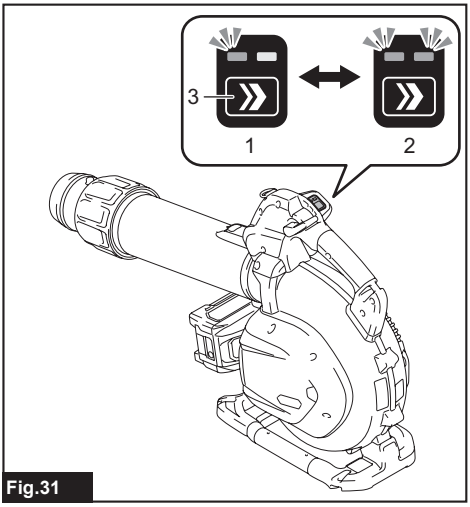

Fig.31

► **1.** Mode 1 (low-mode) indication **2.** Mode 2 (high-mode) indication **3.** Mode button

NOTE: The machine restarts in the mode you have selected before.

NOTE: The mode status can be recognized by pulling the switch trigger.

NOTE: You can change the mode status for a duration of approximately 60 seconds after releasing the switch trigger.

NOTE: The mode lamps automatically go out if you release the switch trigger and no further switch action is made for a certain period.

NOTE: The mode 2 lamp (high-mode) blinks in green if the machine is operated under one of the following inoperable conditions.

- The switch trigger is pulled while the lock lever for fan cover is unlocked or either the suction pipe or blower pipe connection remains loose.
- The battery cartridge is inserted while the control lever is not fully returned to the “OFF” position or the switch trigger is pulled.

Cruise control function

The cruise control function allows the operator to maintain a constant speed without pulling the trigger. To increase the speed, turn the control lever forward. To decrease the speed, turn the control lever backward.

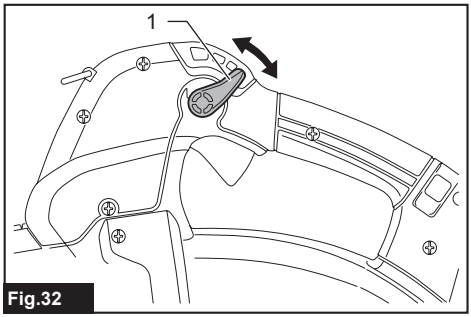

Fig.32

► **1.** Control lever

Accidental re-start preventive function

If you install the battery cartridge into the machine with the switch trigger pulled or the control lever activated, the machine does not start. To start the machine, first release the switch trigger and return the control lever fully.

Electronic function

The machine is equipped with the electronic function for easy operation.

- Constant speed control
  The speed control function provides the constant rotation speed regardless of load conditions.

OPERATION

⚠***CAUTION:*** **Do not place the machine on the ground while it is switched on.** Sand or dust may enter from suction inlet and cause a malfunction or personal injury.

Blower operation

⚠***CAUTION:*** **When performing the blower operation, be sure to remove the suction pipe, suction nozzle, elbow pipe and dust bag from the machine, and attach the blower pipe and nozzles to the machine.**

Hold the machine firmly with a hand and perform the blowing operation by moving it around slowly. When blowing around building, big stone or vehicle, direct the nozzle away from them. When performing an operation in a corner, start from the corner and then move to wide area.

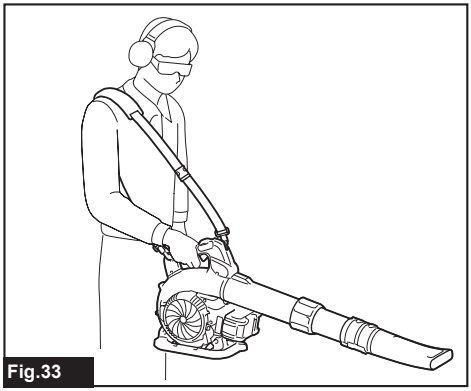

Fig.33

Vacuuming operation

⚠***CAUTION:*** **When performing the vacuuming operation, be sure to remove the blower pipe and nozzles from the machine, and attach the suction pipe, suction nozzle, elbow pipe, dust bag, and shoulder harness to the machine.**

⚠***CAUTION:*** **Check the dust bag frequently for wear or deterioration.**

⚠***CAUTION:*** **Be sure to fasten the fastener of the dust bag before operating the machine.**

⚠***CAUTION:*** **Always switch off the machine before opening or fastening the fastener of the dust bag.**

⚠***CAUTION:*** **Before operating the machine, adjust the length of the strap so that the dust bag does not touch the ground.**

NOTICE: **Do not allow wet materials, such as wet leaves, and foreign materials, such as large wood chips, metals, glass, pebbles, etc., to be sucked into the machine.** Otherwise, a malfunction may occur.

NOTICE: **Empty the dust bag before it becomes full.** Otherwise, a malfunction may occur.

NOTICE: **To prevent the suction of foreign materials, operating the machine in mode 1 (low-mode) is recommended.**

1. Put the shoulder harness on the shoulder as shown in the figure. Adjust the length of the shoulder harness.

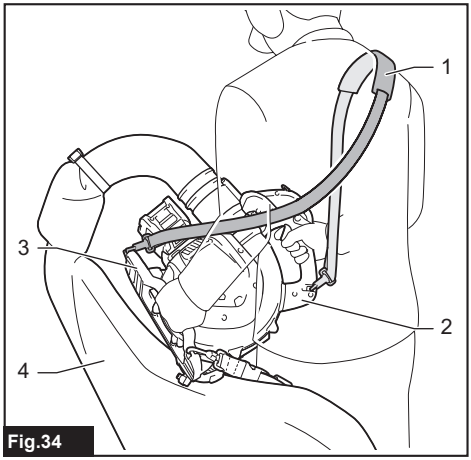

Fig.34

► **1.** Shoulder harness **2.** Carry handle **3.** Sub handle **4.** Dust bag

2. Hold the carry handle with your right hand and the sub handle with the other hand.

Make sure that the buckle is on the front side.

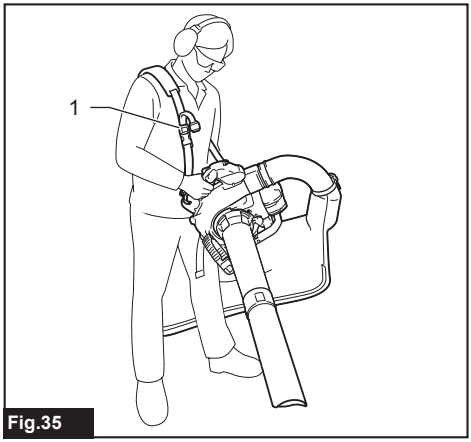

Fig.35

► **1.** Buckle

3. While operating the machine, adjust the switch trigger so that the suction force is appropriate for the work location and conditions.

NOTICE: **If the machine stops during vacuum operation because of clogging, switch off the machine, make sure that all the moving parts come to a complete stop, and remove the battery cartridge(s). Remove the suction pipe, hold the fan cover open, and then remove foreign materials inside the machine.**

Emptying the dust bag

Open the fasteners and empty the dust bag after removing it from the elbow pipe and the sub handle.

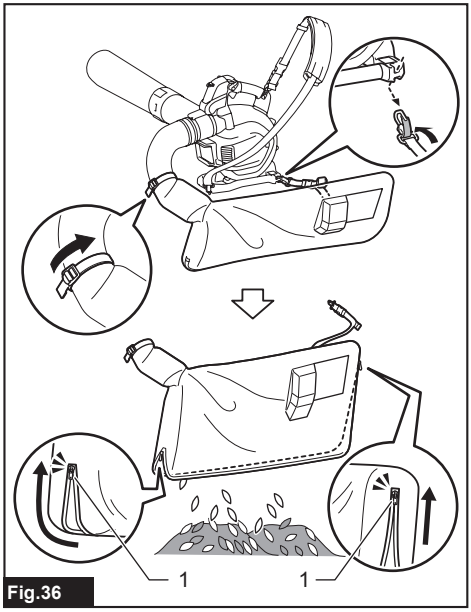

Fig.36

► **1.** Fastener

NOTE: The dust bag can also be emptied without removing it from the elbow pipe and sub handle.

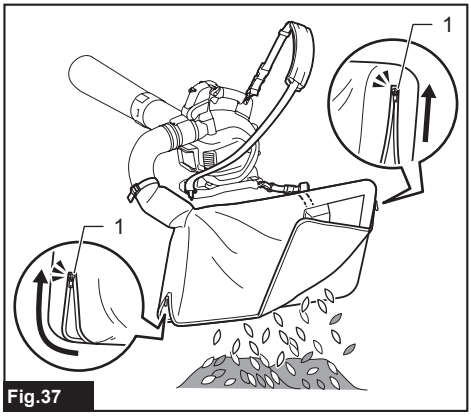

Fig.37

► **1.** Fastener

MAINTENANCE

⚠*CAUTION:* Always be sure that the machine is switched off and the battery cartridge is removed before attempting to perform inspection or maintenance.

To maintain product SAFETY and RELIABILITY, repairs, any other maintenance or adjustment should be performed by Makita Authorized or Factory Service Centers, always using Makita replacement parts.

Cleaning the machine

Clean the machine by wiping off dust with a dry cloth or one dipped in soapy water and wrung out.

***NOTICE:* Never use gasoline, benzine, thinner, alcohol or the like. Discoloration, deformation or cracks may result.**

Remove dust or dirt from the suction inlets.

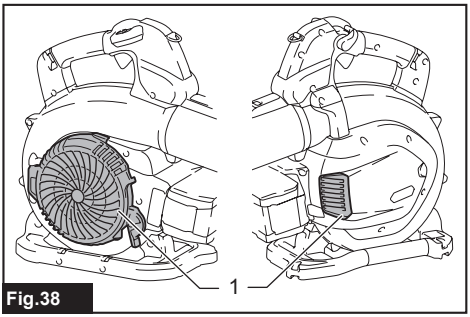

Fig.38

► **1.** Suction inlet

TROUBLESHOOTING

Before asking for repairs, conduct your own inspection first. If you find a problem that is not explained in the manual, do not attempt to dismantle the machine. Instead, ask Makita Authorized Service Centers, always using Makita replacement parts for repairs.

State of abnormality	Probable cause (malfunction)	Remedy
Motor does not run.	Battery cartridge is not installed.	Install the battery cartridge.
	Battery problem (under voltage)	Recharge the battery. If recharging is not effective, replace battery.
	For blower The blower pipe is not attached. The fan cover is not closed.	Attach the blower pipe until the latch locks the connection. Close the fan cover and engage the lock lever.
	For vacuum The elbow pipe or suction pipe is not attached.	Attach the elbow pipe and suction pipe, and then secure the connections.
	The drive system does not work correctly.	Ask your local authorized service center for repair.
Motor stops running after a little use.	Battery's charge level is low.	Recharge the battery. If recharging is not effective, replace battery.
	Overheating.	Stop using the machine to allow it to cool down.
The machine does not reach the maximum speed.	Battery is installed improperly.	Install the battery cartridge as described in this manual.
	Battery power is dropping.	Recharge the battery. If recharging is not effective, replace battery.
	The drive system does not work correctly.	Ask your local authorized service center for repair.
Abnormal vibration: ⇨ stop the machine immediately!	The drive system does not work correctly.	Ask your local authorized service center for repair.
Motor cannot stop: ⇨ Remove the battery immediately!	Electric or electronic malfunction.	Remove the battery and ask your local authorized service center for repair.

OPTIONAL ACCESSORIES

⚠***CAUTION:*** **These accessories or attachments are recommended for use with your Makita product specified in this manual.** The use of any other accessories or attachments might present a risk of injury to persons. Only use accessory or attachment for its stated purpose.

If you need any assistance for more details regarding these accessories, ask your local Makita Service Center.

- Vacuum kit
- Flat nozzle
- Gutter nozzle
- Adapter pipe
- Shoulder harness
- Small dust bag
- Makita genuine battery and charger

NOTE: Some items in the list may be included in the product package as standard accessories. They may differ from country to country.

Makita Europe N.V.

Jan-Baptist Vinkstraat 2, 3070 Kortenberg, Belgium

Makita Corporation

3-11-8, Sumiyoshi-cho, Anjo, Aichi 446-8502 Japan

www.makita.com



885B39-220
EN
20250901