HK	HONG KONG

Diagram / Parts List

UB004G

CORDLESS BACKPACK BLOWER



2026/03

(HK) UB004G / CORDLESS BACKPACK BLOWER

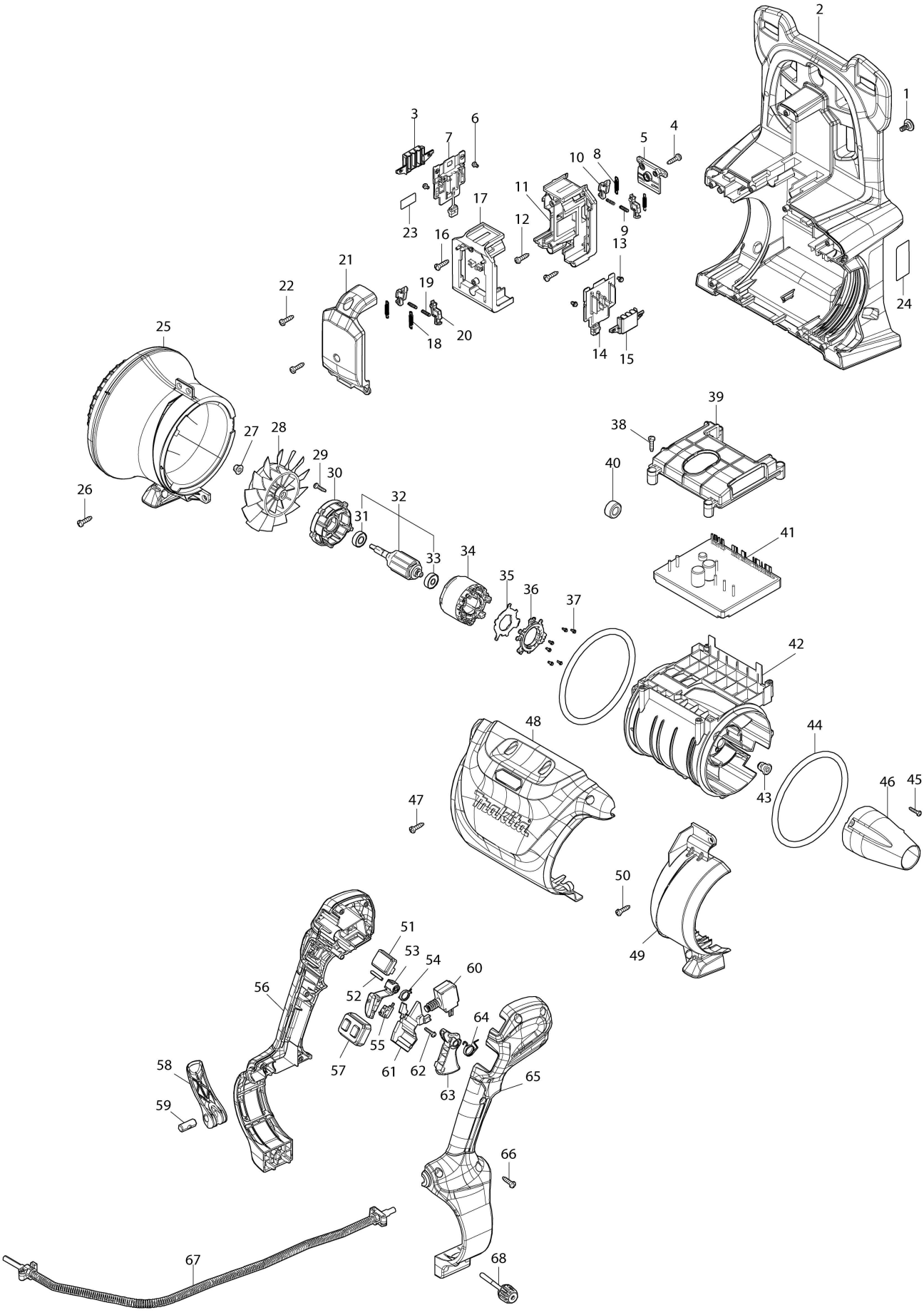

(HK) UB004G / CORDLESS BACKPACK BLOWER

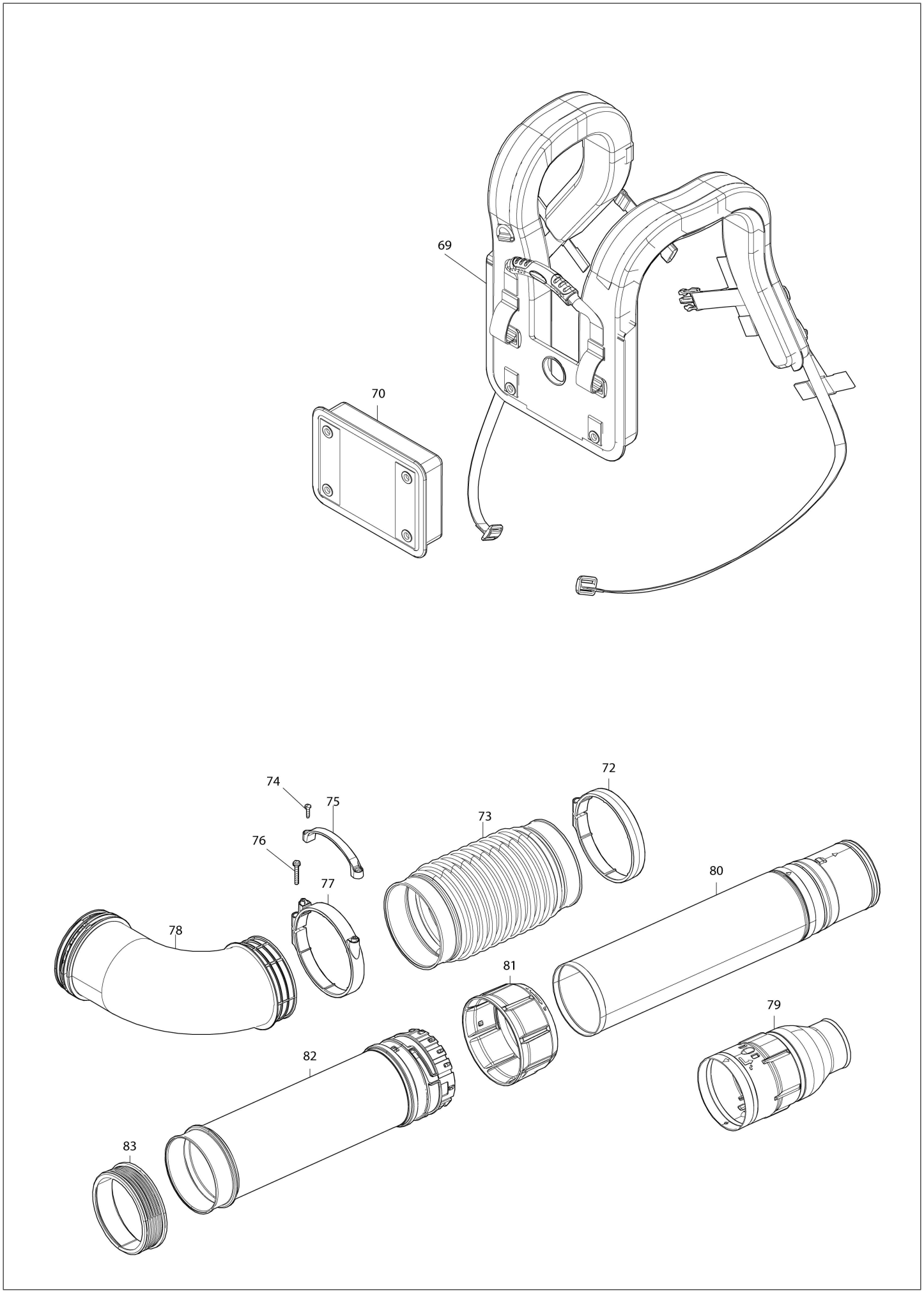

HK HONG KONG

UB004G / CORDLESS BACKPACK BLOWER

Item	Sub	Parts No.	Parts Description	Qty	I/C	E/C No.	Close No.	Remark
001		265F07-1	SHOULDER FLAT HEAD SCREW M5X10	6				
002		1412T5-4	FRAME COMPLETE	1				
003		413B40-5	Terminal cover	1				
004		266326-2	Binding head tapping screw 4X18	1				
005		4134P9-3	LOCK COVER	1				
006		652031-1	Pan head screw M3X6	2				
007		632W79-7	TERMINAL UNIT	1				
008		232722-6	Tension spring 4	2				
009		232472-3	Compression spring 2	2				
010		413B41-3	Lock lever	2				
011		1832G5-7	TERMINAL BOX SET	1				
	C10	263005-3	Rubber pin 6	4				
	D10		INC. 17					
012		266326-2	Binding head tapping screw 4X18	2				
013		652031-1	Pan head screw M3X6	2				
014		632W79-7	TERMINAL UNIT	1				
015		413B40-5	Terminal cover	1				
016		266326-2	Binding head tapping screw 4X18	2				
017		1832G5-7	TERMINAL BOX SET	1				
	C10	263005-3	Rubber pin 6	4				
	D10		INC. 11					
018		232722-6	Tension spring 4	2				
019		232472-3	Compression spring 2	2				
020		413B41-3	Lock lever	2				
021		4134P6-9	TERMINAL BOX COVER	1				
022		266326-2	Binding head tapping screw 4X18	2				
023		8155T7-1	UB004G SERIAL NO. LABEL	1				
024		8155S9-0	UB004G NAME PLATE	1				
025		122K65-9	REAR HOUSING ASSEMBLY	1				
	C10	4136U9-0	REAR COVER	1				
	C20	266326-2	Binding head tapping screw 4X18	4				
026		266326-2	Binding head tapping screw 4X18	1				
027		252286-4	Collared hex. lock nut M5-8	1				
028		240237-9	Fan 110	1				
029		266130-9	Binding head tapping screw 3X16	4				
030		413W41-9	Motor housing cover	1				
031		211166-3	Ball bearing 698DDW	1				
032		519938-3	ROTOR ASS'Y	1				
	D10		INC. 31,33					
033		210310-9	Ball bearing 626DDW	1				
034		629C44-5	Stator	1				
035		620T28-8	CONTROLLER B	1				
036		638A33-7	Lead unit	1				
037		652119-7	Pan head screw M2X6	6				
038		266326-2	Binding head tapping screw 4X18	4				
039		413M52-4	Controller case cover	1				
040		688131-1	Line filter	1				
041		620T27-0	CONTROLLER	1				
042		137434-5	MOTOR HOUSING ASSEMBLY	1				
	C10	263005-3	Rubber pin 6	2				
043		422879-3	Grommet	1				
044		424721-4	Rubber ring 115	2				
045		266130-9	Binding head tapping screw 3X16	3				
046		413W36-2	Cap	1				
047		266326-2	Binding head tapping screw 4X18	6				
048		137425-6	UPPER HOUSING ASSEMBLY	1				
049		4134R2-1	ELBOW SUPPORT	1				
050		266326-2	Binding head tapping screw 4X18	1				
051		620T30-1	INDICATION CIRCUIT	1				
052		256221-4	Pin 3	1				
053		4134R0-5	SWITCH PLATE	1				
054		232980-4	TORSION SPRING 12	1				
055		632G60-2	Switch unit	1				
056		1832K7-1	LEVER CASE SET	1				
	D10		INC. 65					

Interchange
O : Yes
X : No
< : the new part can be substituted for the current.
> : the current part can be substituted for the new.
S : Interchangeable as a set.

HK HONG KONG

UB004G / CORDLESS BACKPACK BLOWER

Item	Sub	Parts No.	Parts Description	Qty	I/C	E/C No.	Close No.	Remark
057		620T29-6	SWITCH CIRCUIT	1				
058		413Y06-3	Lever	1				
059		256A58-5	Pin 9	1				
060		650085-2	SWITCH C3JR-1AV-PAXD3-3	1				
061		4134R5-5	SWITCH COVER	1				
062		266130-9	Binding head tapping screw 3X16	1				
063		4134R1-3	SWITCH LEVER	1				
064		232853-1	Torsion spring 12	1				
065		1832K7-1	LEVER CASE SET	1				
	D10		INC. 56					
066		266326-2	Binding head tapping screw 4X18	6				
067		699262-1	POWER SUPPLY CORD UNIT	1				
068		413Y07-1	Thumb screw M5X45	1				
069		162E36-8	BAND COMPLETE	1				
070		162E37-6	CUSHION PAD COMPLETE	1				
072		122G27-3	Hose clamp 120 assembly	1				
	C10	252103-8	Hex. lock nut M5-8	1				
	C20	911258-5	Pan head screw M5X35 WR	1				
073		413X99-4	Flexible pipe 118	1				
074		266326-2	Binding head tapping screw 4X18	2				
075		4134R6-3	HOSE CLAMP PLATE	1				
076		911258-5	Pan head screw M5X35 WR	1				
077		4134R3-9	HOSE CLAMP 120	1				
	C10	252103-8	Hex. lock nut M5-8	1				
078		4134P3-5	ELBOW	1				
079		4134R4-7	END NOZZLE 71	1				
080		413Y02-1	Middle pipe	1				
081		413Y52-6	Lock ring	1				
082		141V13-5	Pipe complete	1				
083		413Y01-3	Swivel ring	1				
A01		162D24-9	Pipe support belt complete	1				
A02		162D25-7	Pipe belt complete	1				
A03		413Y09-7	FLAT NOZZLE	1				
E01		807811-2	Sound 96dB label	1				
F01		1917R0-0	BATTERY HOLDER SET	1				
F02		1917R2-6	CUSHION BELT COMPLETE SET	1				
F03		1918E9-7	END NOZZLE 81 SET	1				

Interchange
O : Yes
X : No
< : the new part can be substituted for the current.
> : the current part can be substituted for the new.
S : Interchangeable as a set.