ENGLISH: Original instructions

INSTRUCTION MANUAL

Cordless Backpack Blower

UB004G

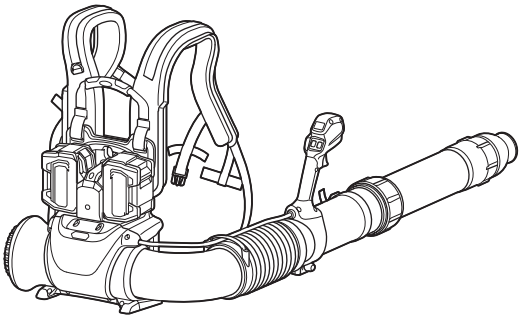

IMPORTANT: Read before use.

SPECIFICATIONS

Model:		UB004G
Capacities *1	Air volume	0 - 19.1 m^3/min
	Air speed [average]	0 - 80.5 m/s
	Air speed [max.]	0 - 96.0 m/s
Dimensions (L x W x H) *2		242 mm x 585 mm x 522 mm
Rated voltage		D.C. 36 V - 40 V max
Net weight	*3	5.0 kg
	*4	5.8 - 9.0 kg
Protection degree		IPX4

- Due to our continuing program of research and development, the specifications herein are subject to change without notice.
- Specifications may differ from country to country.

*1. Measured with end nozzle 71 and battery BL4080H.
*2. Without pipes and nozzles.
*3. Weight without any optional accessories and battery cartridge(s).
*4. The net weight value includes the lightest and heaviest combination of the attachment(s) for normal and safe use and battery cartridge(s) which are specified in the instruction manual.

Applicable battery cartridge and charger

Battery cartridge	BL4020 / BL4025 / BL4040 / BL4040F* / BL4050F* / BL4080F* / BL4080H* * : Recommended battery
Charger	DC40RA / DC40RB / DC40RC / DC40WA / BCC01 / BCC02

- Some of the battery cartridges and chargers listed above may not be available depending on your region of residence.

⚠***WARNING:*** **Only use the battery cartridges and chargers listed above.** Use of any other battery cartridges and chargers may cause injury and/or fire.

Symbols

The followings show the symbols which may be used for the equipment. Be sure that you understand their meaning before use.

	Take particular care and attention.
	Read instruction manual.
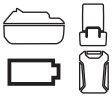	A representative battery applicable to this product.
	Keep hands away from rotating parts.
	Long hair may cause entanglement accident.
	Keep bystanders away.
	Wear eye and ear protection.

	Only for EU countries Due to the presence of hazardous components in the equipment, waste electrical and electronic equipment, accumulators and batteries may have a negative impact on the environment and human health. Do not dispose of electrical and electronic appliances or batteries with household waste! In accordance with the European Directive on waste electrical and electronic equipment and on accumulators and batteries and waste accumulators and batteries, as well as their adaptation to national law, waste electrical equipment, batteries and accumulators should be stored separately and delivered to a separate collection point for municipal waste, operating in accordance with the regulations on environmental protection. This is indicated by the symbol of the crossed-out wheeled bin placed on the equipment.
	Guaranteed sound power level according to EU Outdoor Noise Directive.
	Sound power level according to Australia NSW Noise Control Regulation.

Intended use

The machine is intended for blowing dust.

SAFETY WARNINGS

General power tool safety warnings

WARNING **Read all safety warnings, instructions, illustrations and specifications provided with this power tool.** Failure to follow all instructions listed below may result in electric shock, fire and/or serious injury.

Save all warnings and instructions for future reference.

The term "power tool" in the warnings refers to your mains-operated (corded) power tool or battery-operated (cordless) power tool.

Work area safety

1. **Keep work area clean and well lit.** Cluttered or dark areas invite accidents.
2. **Do not operate power tools in explosive atmospheres, such as in the presence of flammable liquids, gases or dust.** Power tools create sparks which may ignite the dust or fumes.
3. **Keep children and bystanders away while operating a power tool.** Distractions can cause you to lose control.

Electrical safety

1. **Power tool plugs must match the outlet. Never modify the plug in any way. Do not use any adapter plugs with earthed (grounded) power tools.** Unmodified plugs and matching outlets will reduce risk of electric shock.
2. **Avoid body contact with earthed or grounded surfaces, such as pipes, radiators, ranges and refrigerators.** There is an increased risk of electric shock if your body is earthed or grounded.
3. **Do not expose power tools to rain or wet conditions.** Water entering a power tool will increase the risk of electric shock.
4. **Do not abuse the cord. Never use the cord for carrying, pulling or unplugging the power tool. Keep cord away from heat, oil, sharp edges or moving parts.** Damaged or entangled cords increase the risk of electric shock.
5. **When operating a power tool outdoors, use an extension cord suitable for outdoor use.** Use of a cord suitable for outdoor use reduces the risk of electric shock.
6. **If operating a power tool in a damp location is unavoidable, use a residual current device (RCD) protected supply.** Use of an RCD reduces the risk of electric shock.
7. **Power tools can produce electromagnetic fields (EMF) that are not harmful to the user.** However, users of pacemakers and other similar medical devices should contact the maker of their device and/or doctor for advice before operating this power tool.

Personal safety

1. **Stay alert, watch what you are doing and use common sense when operating a power tool. Do not use a power tool while you are tired or under the influence of drugs, alcohol or medication.** A moment of inattention while operating power tools may result in serious personal injury.
2. **Use personal protective equipment. Always wear eye protection.** Protective equipment such as a dust mask, non-skid safety shoes, hard hat or hearing protection used for appropriate conditions will reduce personal injuries.
3. **Prevent unintentional starting. Ensure the switch is in the off-position before connecting to power source and/or battery pack, picking up or carrying the tool.** Carrying power tools with your finger on the switch or energising power tools that have the switch on invites accidents.
4. **Remove any adjusting key or wrench before turning the power tool on.** A wrench or a key left attached to a rotating part of the power tool may result in personal injury.
5. **Do not overreach. Keep proper footing and balance at all times.** This enables better control of the power tool in unexpected situations.
6. **Dress properly. Do not wear loose clothing or jewellery. Keep your hair and clothing away from moving parts.** Loose clothes, jewellery or long hair can be caught in moving parts.
7. **If devices are provided for the connection of dust extraction and collection facilities, ensure these are connected and properly used.** Use of dust collection can reduce dust-related hazards.
8. **Do not let familiarity gained from frequent use of tools allow you to become complacent and ignore tool safety principles.** A careless action can cause severe injury within a fraction of a second.
9. **Always wear protective goggles to protect your eyes from injury when using power tools. The goggles must comply with ANSI Z87.1 in the USA, EN 166 in Europe, or AS/NZS 1336 in Australia/New Zealand. In Australia/New Zealand, it is legally required to wear a face shield to protect your face, too.**

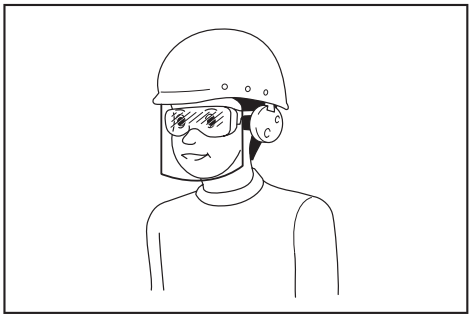

It is an employer's responsibility to enforce the use of appropriate safety protective equipments by the tool operators and by other persons in the immediate working area.

Power tool use and care

1. **Do not force the power tool. Use the correct power tool for your application.** The correct power tool will do the job better and safer at the rate for which it was designed.
2. **Do not use the power tool if the switch does not turn it on and off.** Any power tool that cannot be controlled with the switch is dangerous and must be repaired.
3. **Disconnect the plug from the power source and/or remove the battery pack, if detachable, from the power tool before making any adjustments, changing accessories, or storing power tools.** Such preventive safety measures reduce the risk of starting the power tool accidentally.
4. **Store idle power tools out of the reach of children and do not allow persons unfamiliar with the power tool or these instructions to operate the power tool.** Power tools are dangerous in the hands of untrained users.
5. **Maintain power tools and accessories. Check for misalignment or binding of moving parts, breakage of parts and any other condition that may affect the power tool's operation. If damaged, have the power tool repaired before use.** Many accidents are caused by poorly maintained power tools.
6. **Keep cutting tools sharp and clean.** Properly maintained cutting tools with sharp cutting edges are less likely to bind and are easier to control.
7. **Use the power tool, accessories and tool bits etc. in accordance with these instructions, taking into account the working conditions and the work to be performed.** Use of the power tool for operations different from those intended could result in a hazardous situation.
8. **Keep handles and grasping surfaces dry, clean and free from oil and grease.** Slippery handles and grasping surfaces do not allow for safe handling and control of the tool in unexpected situations.
9. **When using the tool, do not wear cloth work gloves which may be entangled.** The entanglement of cloth work gloves in the moving parts may result in personal injury.

Battery tool use and care

1. **Recharge only with the charger specified by the manufacturer.** A charger that is suitable for one type of battery pack may create a risk of fire when used with another battery pack.
2. **Use power tools only with specifically designated battery packs.** Use of any other battery packs may create a risk of injury and fire.
3. **When battery pack is not in use, keep it away from other metal objects, like paper clips, coins, keys, nails, screws or other small metal objects, that can make a connection from one terminal to another.** Shorting the battery terminals together may cause burns or a fire.
4. **Under abusive conditions, liquid may be ejected from the battery; avoid contact. If contact accidentally occurs, flush with water. If liquid contacts eyes, additionally seek medical help.** Liquid ejected from the battery may cause irritation or burns.
5. **Do not use a battery pack or tool that is damaged or modified.** Damaged or modified batteries may exhibit unpredictable behaviour resulting in fire, explosion or risk of injury.
6. **Do not expose a battery pack or tool to fire or excessive temperature.** Exposure to fire or temperature above 130 °C may cause explosion.
7. **Follow all charging instructions and do not charge the battery pack or tool outside the temperature range specified in the instructions.** Charging improperly or at temperatures outside the specified range may damage the battery and increase the risk of fire.

Service

1. **Have your power tool serviced by a qualified repair person using only identical replacement parts.** This will ensure that the safety of the power tool is maintained.
2. **Never service damaged battery packs.** Service of battery packs should only be performed by the manufacturer or authorized service providers.
3. **Follow instruction for lubricating and changing accessories.**

Cordless backpack garden blower safety warnings

1. **Do not use the machine in bad weather conditions, especially when there is a risk of lightning.** This decreases the risk of being struck by lightning.
2. **Before use, check the supply cord and any extension cord for signs of damage or aging. Do not touch the cord before disconnecting the supply. Do not use the machine if the cord is damaged or worn.** A damaged supply cord may result in electric shock, fire and/or serious injury.
3. **Wear eye protection and ear protection.** Adequate protective equipment will reduce the risk of personal injury.
4. **While operating the machine, always wear non-slip and protective footwear. Do not operate the machine when barefoot or wearing open sandals.** This reduces the risk of injury to the feet.
5. **Do not wear loose fitting clothing or articles such as scarves, strings, chains, ties, etc., that could get drawn into the air inlets. Tie back or cover long hair to make sure it does not get drawn into the air inlets.** If any of these items are drawn into the air inlets, it can increase the risk of personal injury.
6. **Keep bystanders away while operating the machine.** Thrown debris can increase the risk of personal injury.
7. **Never point the blower nozzle in the direction of people or pets or in the direction of windows. Use extra caution when blowing debris near solid objects, such as trees, automobiles and walls that can cause debris to ricochet.** Thrown objects can damage property and increase the risk of personal injury.
8. **Do not use the machine to blow anything that is burning or smoking, such as cigarettes,**

matches or hot ashes. These ignition sources may increase the risk of fire.

9. **Do not touch the fan while still in motion. Turn off the machine and wait until the fan stops before removing any part that may give access to the fan.** This reduces the risk of injury from moving parts.
10. **When clearing jammed material or servicing the machine, make sure the power switch is off.** Unexpected starting of the machine while clearing jammed material or servicing may result in serious personal injury.
11. **Incoming foreign substances may block the air channels and laden air flows. Remove any obstacles in the air path if the blowing performance is being affected.**
12. **Always wear gloves during operation.** Avoid operating the machine with your bare hands. This reduces the risk of injury to the hands and fingers.
13. **Use this machine at ground level, not on ladders or any unstable support.**
14. **When the machine strikes a hard object or if there appears to be excessive vibration, inspect the machine for damage.**
15. **Switch off the machine and remove the battery cartridge and make sure that all moving parts have come to a complete stop**
    - **whenever you leave the machine.**
    - **before clearing blockages.**
    - **before checking, cleaning or working on the machine.**
    - **if the machine starts to vibrate abnormally.**
16. **Always make sure that the ventilation openings are kept clear of debris.**
17. **Clean the machine before storage.**
18. **Never blow dangerous materials, such as nails, fragments of glass, or blades.**
19. **During operation, keep the cord away from obstacles. The cord caught by obstacles may cause serious injury.**
20. **Wear no more than one set of harness at one time.** Putting on harness and belts in layers makes it difficult to take them off in cases of emergency.
21. **Make sure that no other wearable interferes with the release and removal of harness.**
22. **Do not apply a heavy load to the shoulder harness.** The shoulder harness will be damaged under conditions of high tension and severe stress.
23. **Do not use the machine in bad weather where visibility is limited.** Failure to do so may cause fall or incorrect operation due to low visibility.
24. **Avoid operating the blower for a long time in low temperature environment.**
25. **When you use the machine on muddy ground, wet slope, or slippery place, pay attention to your footing.**
26. **Do not leave the machine unattended outdoors in the rain.**
27. **When storing the machine, avoid direct sunlight and rain, and store it in a place where it does not get hot or humid.**
28. **Always bend your knees and keep your body upright when lifting the machine.**

Electrical and battery safety

1. **Avoid dangerous environment. Do not use the tool in damp or wet locations or expose it to rain. Water entering the tool will increase the risk of electric shock.**
2. **Do not open or mutilate the battery(ies).** Released electrolyte is corrosive and may cause damage to the eyes or skin. It may be toxic if swallowed.
3. **Do not replace the battery with wet hands.**
4. **Do not leave the battery in the rain, nor charge, use, or store the battery in a damp or wet place.**
5. **Do not wet the terminal of battery with liquid such as water, or submerge the battery.** If the terminal gets wet or liquid enters inside of battery, the battery may be short circuited and there is a risk of overheat, fire, or explosion.
6. **After removing the battery from the tool or charger, be sure to attach the battery cover to the battery and store it in a dry place.**
7. **If the battery cartridge gets wet, drain the water inside and then wipe it with a dry cloth. Dry the battery cartridge completely in a dry place before use.**

SAVE THESE INSTRUCTIONS.

⚠*WARNING:* DO NOT let comfort or familiarity with product (gained from repeated use) replace strict adherence to safety rules for the subject product.

MISUSE or failure to follow the safety rules stated in this instruction manual may cause serious personal injury.

Important safety instructions for battery cartridge

1. **Before using battery cartridge, read all instructions and cautionary markings on (1) battery charger, (2) battery, and (3) product using battery.**
2. **Do not disassemble or tamper with the battery cartridge.** It may result in a fire, excessive heat, or explosion.
3. **If operating time has become excessively shorter, stop operating immediately. It may result in a risk of overheating, possible burns and even an explosion.**
4. **If electrolyte gets into your eyes, rinse them out with clear water and seek medical attention right away. It may result in loss of your eyesight.**
5. **Do not short the battery cartridge:**
   (1) **Do not touch the terminals with any conductive material.**
   (2) **Avoid storing battery cartridge in a container with other metal objects such as nails, coins, etc.**

(3) **Do not expose battery cartridge to water or rain.**

A battery short can cause a large current flow, overheating, possible burns and even a breakdown.

6. **Do not store and use the tool and battery cartridge in locations where the temperature may reach or exceed 50 °C (122 °F).**
7. **Do not incinerate the battery cartridge even if it is severely damaged or is completely worn out. The battery cartridge can explode in a fire.**
8. **Do not nail, cut, crush, throw, drop the battery cartridge, or hit against a hard object to the battery cartridge.** Such conduct may result in a fire, excessive heat, or explosion.
9. **Do not use a damaged battery.**
10. **The contained lithium-ion batteries are subject to the Dangerous Goods Legislation requirements.**
    For commercial transports e.g. by third parties, forwarding agents, special requirement on packaging and labeling must be observed.
    For preparation of the item being shipped, consulting an expert for hazardous material is required.
    Please also observe possibly more detailed national regulations.
    Tape or mask off open contacts and pack up the battery in such a manner that it cannot move around in the packaging.
11. **When disposing the battery cartridge, remove it from the tool and dispose of it in a safe place. Follow your local regulations relating to disposal of battery.**
12. **Use the batteries only with the products specified by Makita.** Installing the batteries to non-compliant products may result in a fire, excessive heat, explosion, or leak of electrolyte.
13. **If the tool is not used for a long period of time, the battery must be removed from the tool.**
14. **During and after use, the battery cartridge may take on heat which can cause burns or low temperature burns. Pay attention to the handling of hot battery cartridges.**
15. **Do not touch the terminal of the tool immediately after use as it may get hot enough to cause burns.**
16. **Do not allow chips, dust, or soil stuck into the terminals, holes, and grooves of the battery cartridge.** It may cause heating, catching fire, burst and malfunction of the tool or battery cartridge, resulting in burns or personal injury.
17. **Unless the tool supports the use near high-voltage electrical power lines, do not use the battery cartridge near high-voltage electrical power lines.** It may result in a malfunction or breakdown of the tool or battery cartridge.
18. **Keep the battery away from children.**

SAVE THESE INSTRUCTIONS.

CAUTION: **Only use genuine Makita batteries.** Use of non-genuine Makita batteries, or batteries that have been altered, may result in the battery bursting causing fires, personal injury and damage. It will also void the Makita warranty for the Makita tool and charger.

NOTICE: Makita is not responsible for any accidents resulting from the use of non-genuine Makita batteries or batteries that have been modified. Genuine Makita batteries have been rigorously evaluated for compatibility with Makita tools and chargers, in line with applicable legislation and safety standards.

Tips for maintaining maximum battery life

1. **Charge the battery cartridge before completely discharged. Always stop tool operation and charge the battery cartridge when you notice less tool power.**
2. **Never recharge a fully charged battery cartridge. Overcharging shortens the battery service life.**
3. **Charge the battery cartridge with room temperature at 10 °C - 40 °C (50 °F - 104 °F). Let a hot battery cartridge cool down before charging it.**
4. **When not using the battery cartridge, remove it from the tool or the charger.**
5. **Charge the battery cartridge if you do not use it for a long period (more than six months).**

PARTS DESCRIPTION

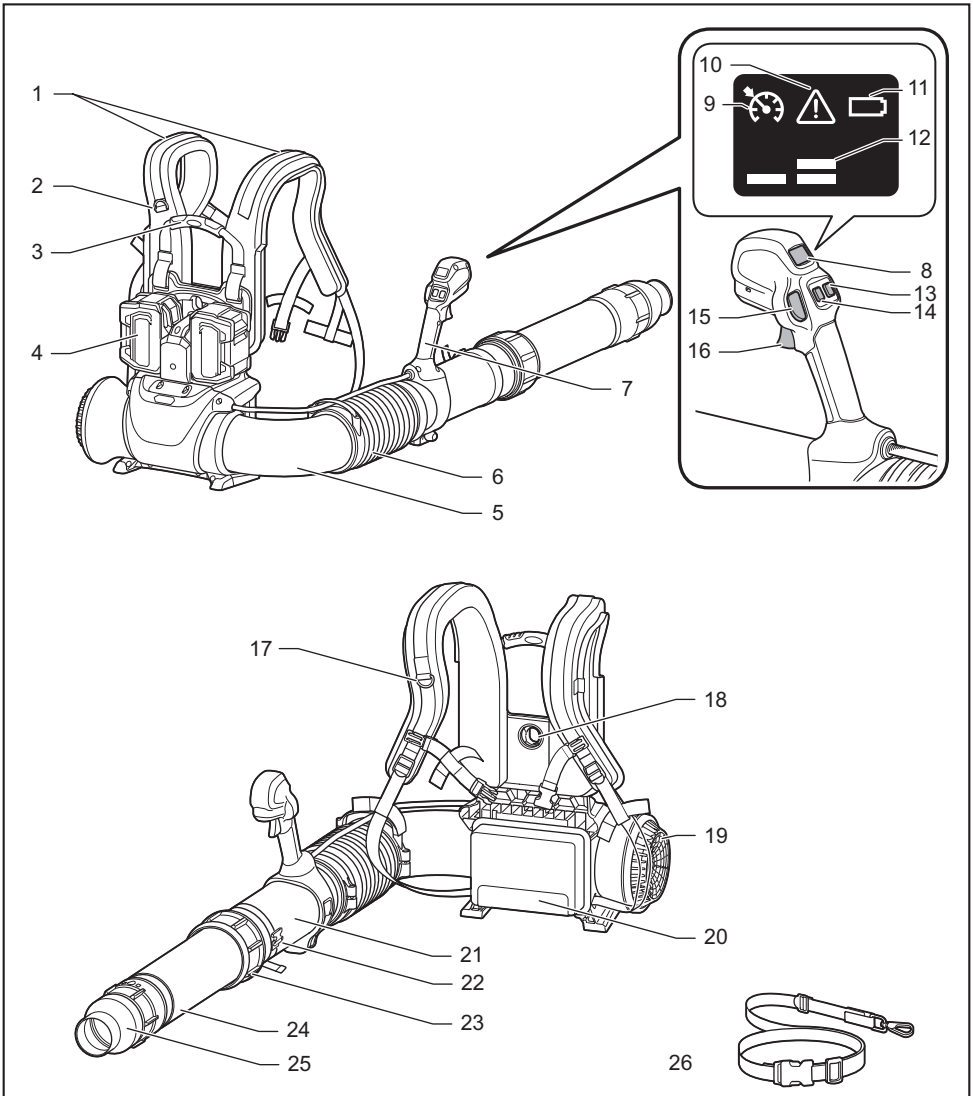

Fig.1

1	Shoulder harness	2	Hanger ring (for folding strap)	3	Carry handle grip
4	Battery cartridge	5	Elbow pipe	6	Flexible pipe
7	Control handle	8	Control display	9	Cruise control lamp
10	Alert lamp	11	Battery lamp	12	Mode lamps
13	Main power button	14	Mode button	15	Cruise control button
16	Switch trigger	17	Hanger ring (for pipe support belt)	18	Hang hole
19	Air vent	20	Cushion pad	21	Blower pipe
22	Folding strap	23	Lock ring	24	Middle pipe

25	Nozzle	26	Pipe support belt	-	-

ASSEMBLY

***CAUTION:* Always be sure that all the battery cartridges are removed before carrying out any work on the machine.** Failure to remove all the battery cartridges may result in serious personal injury from accidental start-up.

***CAUTION:* Never start the machine unless it is completely assembled.** Operation of the machine in a partially assembled state may result in serious personal injury from accidental start-up.

Assembling blower pipes

***NOTICE:* Be careful not to twist the cable of the control handle when assembling blower pipes.**

1. Loosen the screw on a hose clamp. Place the hose clamp over the opening end of the flexible pipe.

2. Attach the blower pipes to the flexible pipe. Then tighten the screw on the hose clamp.

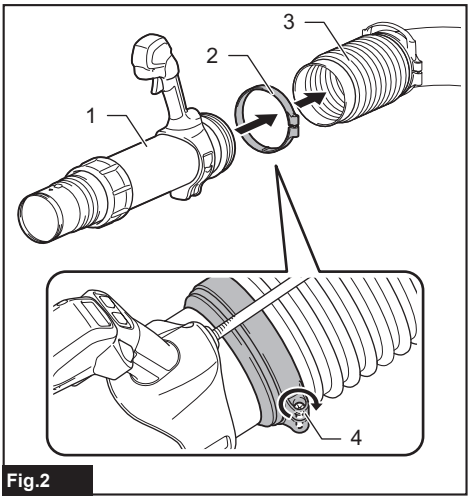

Fig.2

► **1.** Blower pipes **2.** Hose clamp **3.** Flexible pipe **4.** Screw

NOTE: Be sure to fasten the hose clamp with its opening facing inward.

Installing blower nozzles

***NOTICE:* Be sure to tighten the lock ring and hold the blower pipes firmly before assembling and disassembling nozzles.**

Attach one of blower nozzles available with the machine to the middle pipe.

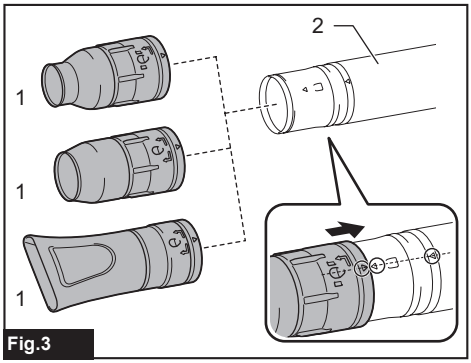

Fig.3

► **1.** Nozzles **2.** Middle pipe

Align the arrow mark on a nozzle with those on the middle pipe. Then slide the nozzle onto the front end of the middle pipe until the projection on the middle pipe is engaged with the cutout groove on the nozzle.

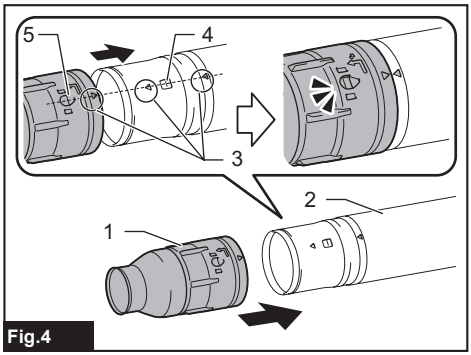

Fig.4

► **1.** Nozzle **2.** Middle pipe **3.** Arrow marks **4.** Projection **5.** Cutout groove

For disassembly, turn the nozzle in the direction indicated by the arrow on the nozzle to disengage the lock. Then slide the nozzle off the middle pipe.

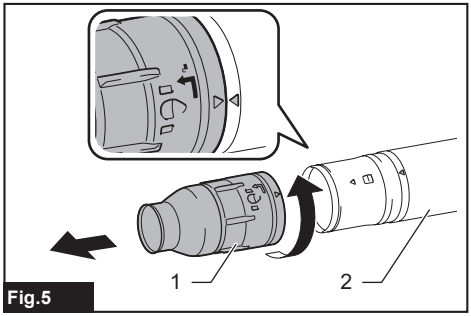

Fig.5

► **1.** Nozzle **2.** Middle pipe

Adjusting blower pipes lengths

The blower pipes can be extended to the desired lengths according to your needs.

Loosen the lock ring by turning it in the direction shown in the figure. Slide the middle pipe out from the blower pipe to your desired length, and then turn the lock ring counter-wise to lock the middle pipe.

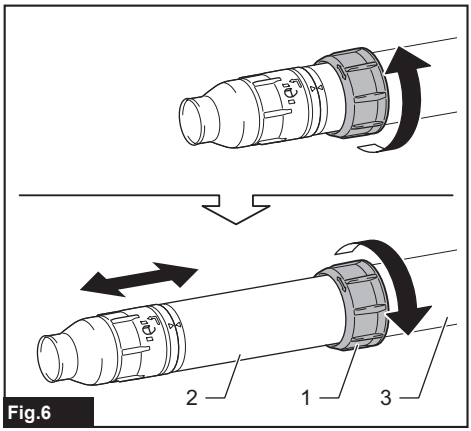

Fig.6

► **1.** Lock ring **2.** Middle pipe **3.** Blower pipe

NOTE: Fasten the lock ring firmly to set the middle pipe in place and ensure a secure fit.

Adjusting shoulder harness

⚠*CAUTION:* Make sure that the machine is switched off and the battery cartridge is removed before adjusting the shoulder harness.

1. Put on the machine. Adjust the lengths of the shoulder harness by pulling or loosening the adjusting straps through the slider buckles.

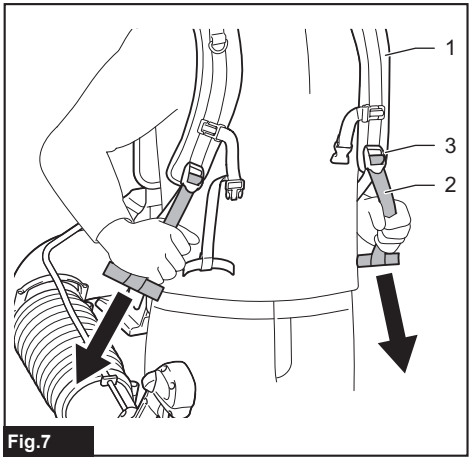

Fig.7

► **1.** Shoulder harness **2.** Adjusting strap **3.** Slider buckle

2. Carefully position the cushion pad so it sits right on your waist.

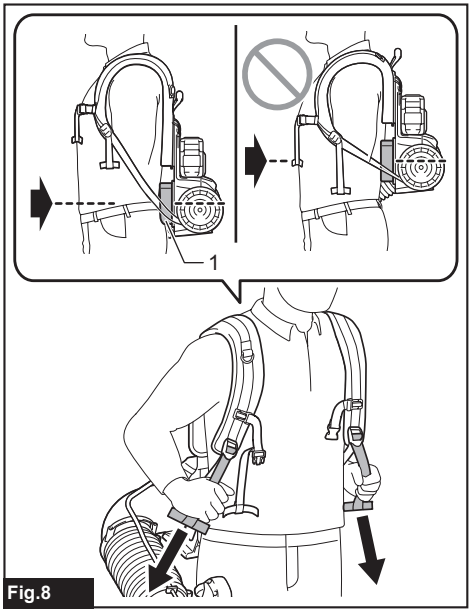

Fig.8

► **1.** Cushion pad

NOTE: Make sure that the cushion pad is correctly positioned as shown in the figure. If the cushion pad is above or below the recommended position, it is difficult to work comfortably.

3. Lock the buckle of the chest belt. Place the belt in a correct position as shown in the figure. Then adjust the lengths of the chest belt by pulling or loosening the adjusting strap.

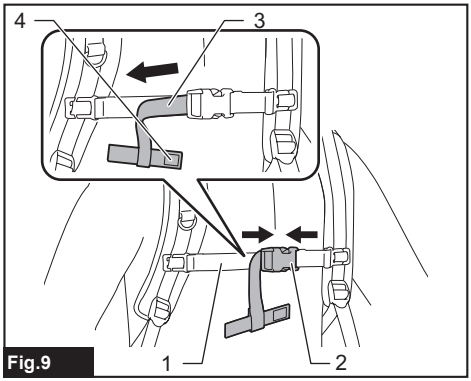

Fig.9

► **1.** Chest belt **2.** Buckle **3.** Adjusting strap **4.** Hook and loop fastener

4. Make a loose end of the adjusting strap on the harness several folds and lay it flat over the tensioned strap. Tie them up together with the hook and loop fastener.

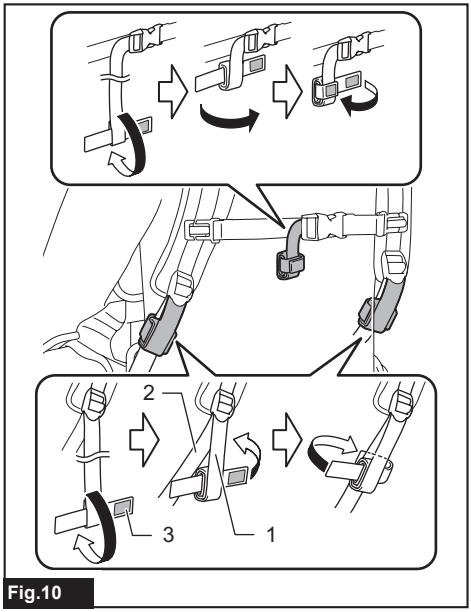

Fig.10

► **1.** Loose adjusting strap **2.** Tensioned adjusting strap **3.** Hook and loop fastener

Installing waist support belt

Optional accessory

The adjustable waist support belt helps distribute weight evenly for worker comfort and reduces strain on your back and shoulders.

1. Detach the cushion pad that is pre-installed in the machine.

Peel the cushion pad off the base plate. Loosen four screws that retain the pad position at each corner underneath. Then remove the cushion pad from the machine.

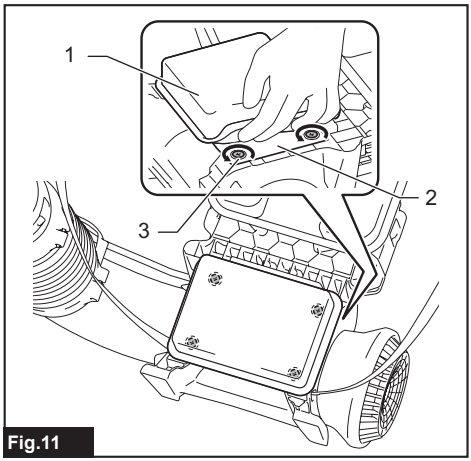

Fig.11

► **1.** Cushion pad **2.** Base plate **3.** Screw

2. Place the waist support belt on the base plate, aligning the retaining holes together to screw them up.

Make sure that a rectangle retainer on the base plate well fits into the cut out in the waist support belt to secure the position.

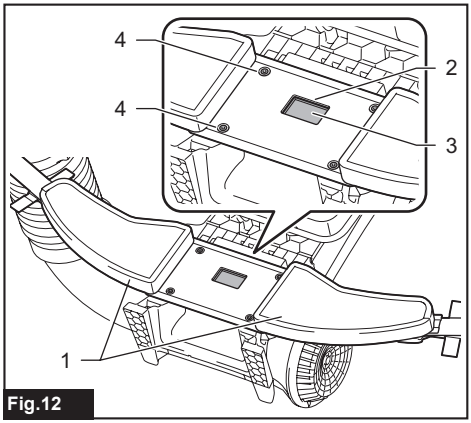

Fig.12

► **1.** Waist support belt **2.** Cut out **3.** Rectangle retainer **4.** Retaining hole

3. Place the cushion pad back on the waist support belt and secure the position with 4 screws.

Make sure to place the cushion pad with its non-slip surface facing downward.

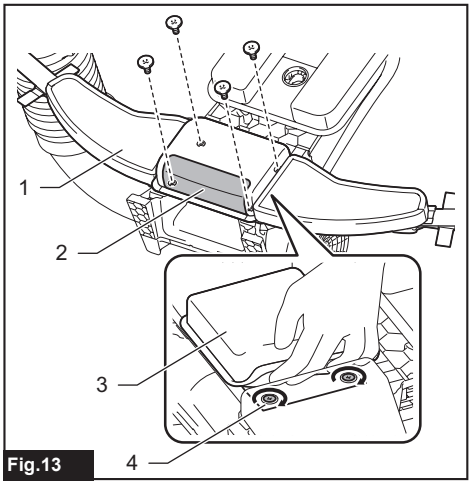

Fig.13

► **1.** Waist support belt **2.** Non-slip surface **3.** Cushion pad **4.** Screw

Adjusting waist support belt

1. Put on the machine. Adjust the lengths of the waist support belt by pulling or loosening the adjusting straps through the slider buckles.

Make sure that the waist support belt well fits around your waist.

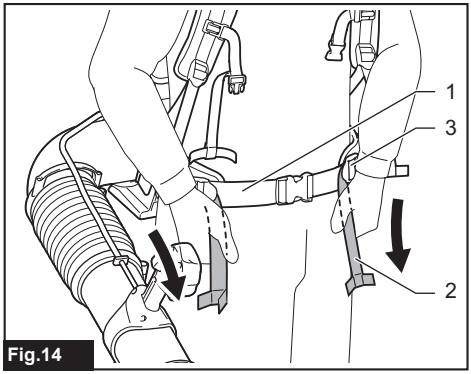

Fig.14

► **1.** Waist support belt **2.** Adjusting strap **3.** Slider buckle

2. Fold and fix the adjusting straps with the hook and loop fasteners as shown in the figure.

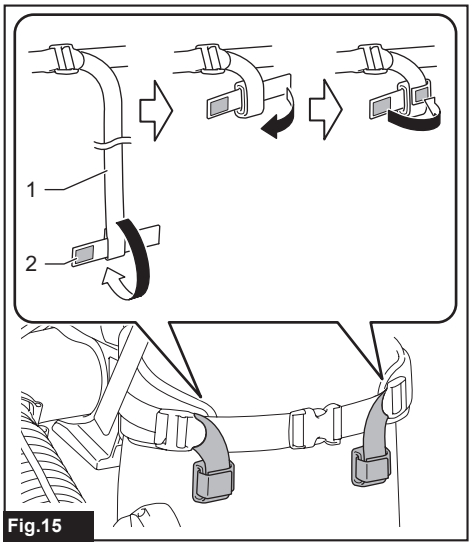

Fig.15

► **1.** Adjusting strap **2.** Hook and loop fastener

NOTE: When you use the battery holder (optional accessory), pass the battery holder through the gap between the waist support belt and the adjusting strap.

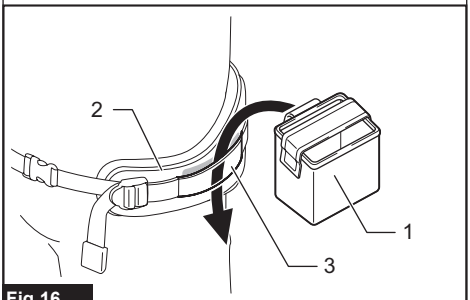

Fig.16

► **1.** Battery holder **2.** Waist support belt **3.** Adjusting strap

Adjusting control handle position

The control handle can be positioned at your convenience and comfort.

Release the clamp lever. Move and turn the control handle along the blower pipe to your comfortable position. Then tighten the clamp lever.

When the clamp becomes loose during use, retighten the clamp screw.

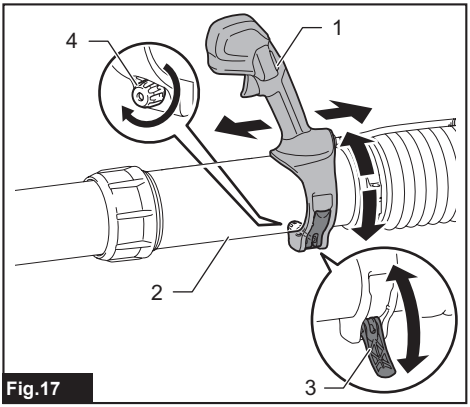

Fig.17

► **1.** Control handle **2.** Blower pipe **3.** Clamp lever **4.** Clamp screw

Installing pipe support belt

The pipe support belt helps to reduce the load on your hand during operation. Snap the hook on the shoulder harness to hang the blower pipes with the adjustable belts.



Fig.18

1. Bind the strap belt around the blower pipe.

Be sure to tie up the control cable for clamping it on the blower pipe.

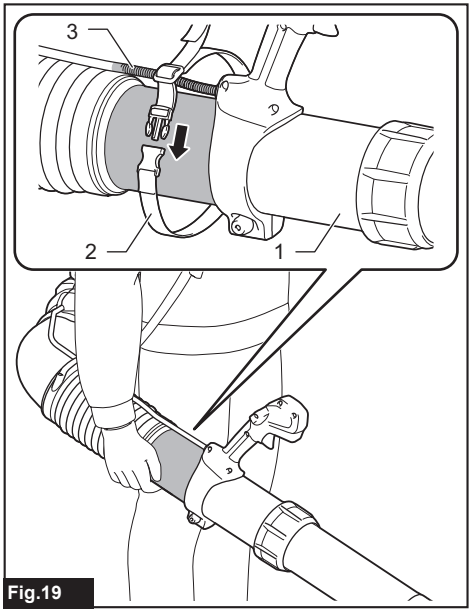

Fig.19

► **1.** Blower pipe **2.** Strap belt **3.** Control cable

2. Adjust the tension of the support belt on the blower pipe.

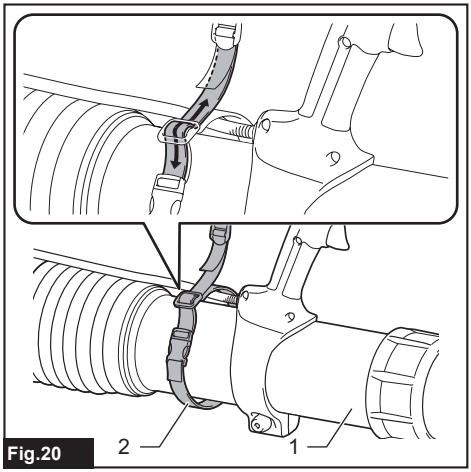

Fig.20

► **1.** Blower pipe **2.** Strap belt

3. Hang the snap hook on the hanger ring in the right shoulder harness.

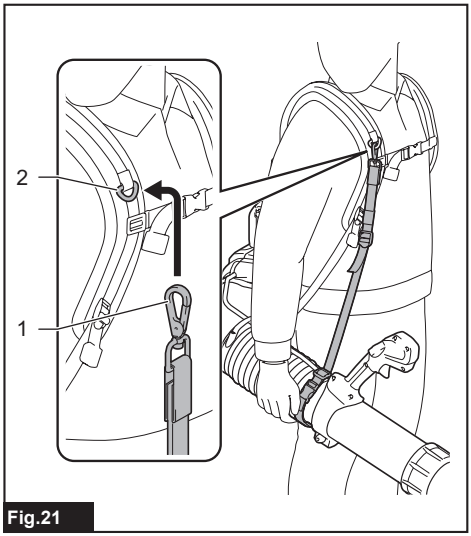

Fig.21

► **1.** Snap hook **2.** Hanger ring

4. Adjust the lengths of the support belt according to your preferences.

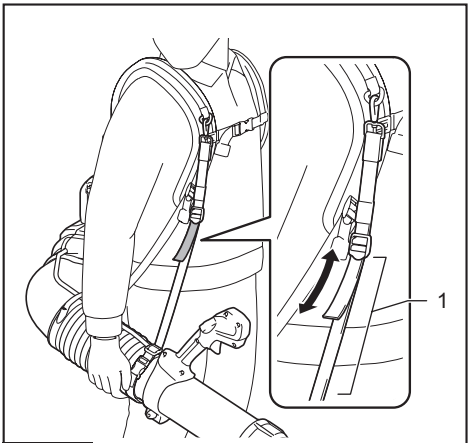

Fig.22

► **1.** Support belt

Installing folding strap

Use the folding strap to attach the blower pipes to the shoulder harness when you do not use the machine.

1. Loosen a strap belt to widen its opening. Place the strap belt over along the blower pipes and wrap the belt around the blower pipe.

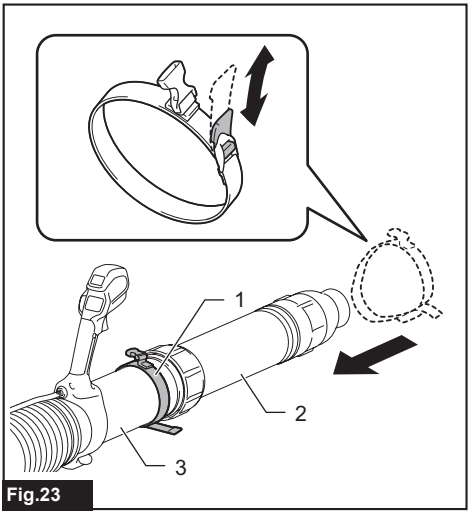

Fig.23

► **1.** Strap belt **2.** Middle pipe **3.** Blower pipe

2. Buckle a suspender and hang it on the hanger ring set behind the left shoulder harness.

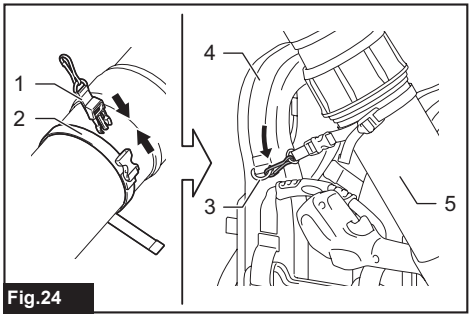

Fig.24

► **1.** Suspender **2.** Strap belt **3.** Hanger ring **4.** Left shoulder harness **5.** Blower pipe

NOTICE: **Unbuckle the folding strap before operating the machine.**

FUNCTIONAL DESCRIPTION

⚠***CAUTION:*** **Always be sure that the machine is switched off and all the battery cartridges are removed before adjusting or checking function on the machine.**

Installing or removing battery cartridges

⚠***CAUTION:*** **Always switch off the machine before installing and removing battery cartridges.**

⚠***CAUTION:*** **Hold the machine and battery cartridges firmly when installing or removing battery cartridges.** Failure to hold the machine and the battery cartridges firmly may cause them to slip off your hands and result in damage to the machine and battery cartridges and a personal injury.

⚠***CAUTION:*** **Always install the battery cartridges fully until the red indicators cannot be seen.** If not, they may accidentally fall out of the machine, causing injury to you or someone around you.

⚠***CAUTION:*** **Do not install battery cartridges forcibly.** If the cartridges do not slide in easily, they are not being inserted correctly.

The machine has double battery slots. With two identical batteries in parallel, you can extend your running time in one or more uses without having to stop to recharge batteries. The machine also works with a single battery, so you can choose with either double batteries or single battery according to your needs.

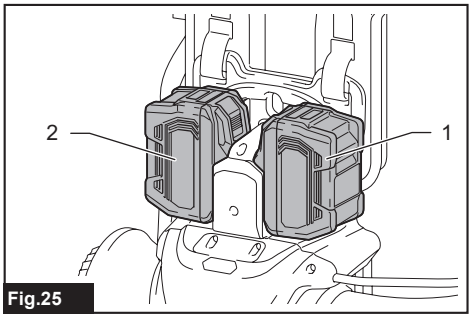

Fig.25

► **1.** Right battery slot **2.** Left battery slot

With double batteries

Continuous drive with two batteries allows longer runtime and more efficient performance. When the first battery is becoming empty, the machine automatically switches a power source, so it continues working with the second battery.

NOTE: The right battery slot (when facing against the back of the machine) has priority over the left battery slot. The left battery slot will only be identified as a power source, either when no battery is installed in the right battery slot or the battery in the right battery slot becomes empty.

NOTE: Once the machine switches its power source from the right battery slot to the left without stopping operation, you can remove the battery from the right battery slot and recharge it.

To give priority back to the right battery slot after installing a recharged battery, restart the machine.

With a single battery

Only one battery is required as a power source in either the left or right battery slot. The machine automatically determines which battery slot is available according to operating conditions.

Installation and uninstallation

To install the battery cartridge, align the tongue on the battery cartridge with the groove in the housing and slip it into place. Insert it all the way until it locks in place with a little click. If you can see the red indicator as shown in the figure, it is not locked completely.

To remove the battery cartridge, slide it from the tool while sliding the button on the front of the cartridge.

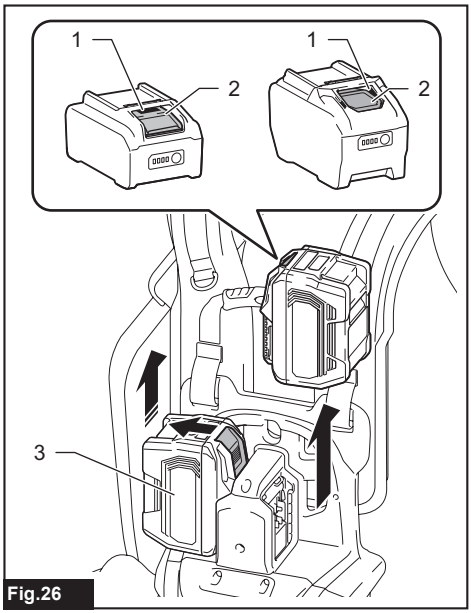

Fig.26

► **1.** Red indicator **2.** Button **3.** Battery cartridge

NOTE: Power shifting between batteries may be led in different intervals based on the operation mode you set. When the machine switches the power source from the first battery to the second, it may require a temporary halt in operations, causing a slight loss of blowing power. Please note that it is not malfunction so the machine recovers and resumes operations immediately after the pause.

Battery lamp

The battery lamp on the control display shows remaining battery power for easy monitoring.
Either with a single battery or double batteries, the battery lamp blinks when the battery power becomes insufficient for continuous operation.
Further use is possible even while the battery lamp is blinking, until the battery cartridge becomes empty.

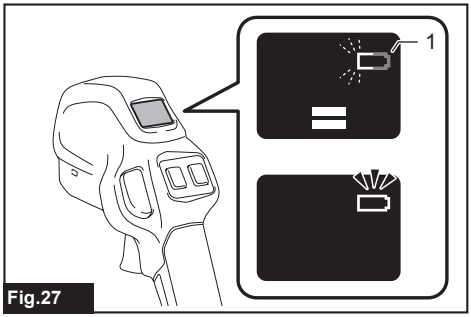

Fig.27

► **1.** Battery lamp

Indication	Remaining power	Battery status
	Low	No alternative power source and the battery power is becoming low.
	Empty	The battery power becomes too low to operate. The mode lamps on display go out. Recharge the battery.

NOTE: Use the indicator as a reference. Display indications may differ depending on the working condition and ambient temperature.

Indicating the remaining battery capacity

Press the check button on the battery cartridge to indicate the remaining battery capacity. The indicator lamps light up for a few seconds.

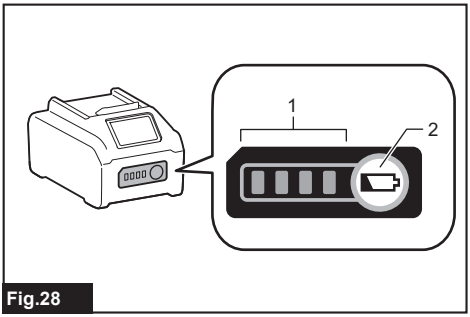

Fig.28

► **1.** Indicator lamps **2.** Check button

Indicator lamps			Remaining capacity
Lighted	Off	Blinking	
■ ■ ■ ■			75% to 100%
■ ■ ■ □			50% to 75%
■ ■ □ □			25% to 50%
■ □ □ □			0% to 25%
◪ □ □ □			Charge the battery.
■ ■ □ □ ↑↓ □ □ ■ ■			The battery may have malfunctioned.

NOTE: Depending on the conditions of use and the ambient temperature, the indication may differ slightly from the actual capacity.

NOTE: The first (far left) indicator lamp will blink when the battery protection system works.

Machine/battery protection system

The machine is equipped with a machine/battery protection system. This system automatically cuts off power to the motor to extend machine and battery life. The machine will automatically stop during operation if the machine or battery is placed under one of the following conditions:

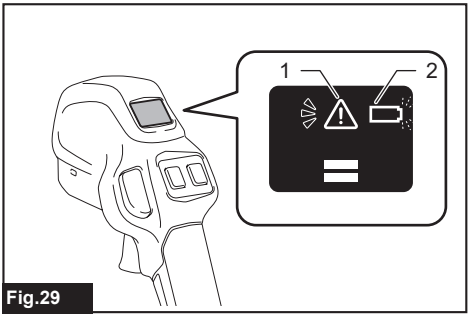

Fig.29

► **1.** Alert lamp **2.** Battery lamp

Overload protection

When the battery is operated in a manner that causes it to draw an abnormally high current, the machine automatically stops and the alert lamp blinks in red. In this situation, turn the machine off and stop the application that caused the machine to become overloaded. Then turn the machine on to restart.

Overheat protection

When the machine is overheated, the machine stops automatically, the mode lamps go out and the alert lamp lights up in red. In this case, let the machine cool before turning the machine on again.

When the battery is overheated, the machine stops automatically, the mode lamps go out and the battery lamp lights up in red. In this case, let the battery cool before turning the machine on again.

Overdischarge protection

When the battery capacity becomes low, the battery lamp blinks in red to alert you. Further use of remaining battery capacity will cause overdischarge and stop the machine with the battery lamp lighting up in red and the mode lamps going out. In such cases, remove the battery from the machine and charge the battery.

Protections against other causes

Protection system is also designed for other causes that could damage the machine and allows the machine to stop automatically. Take all the following steps to clear the causes, when the machine has been brought to a temporary halt or stop in operation.

1. Turn the machine off, and then turn it on again to restart.
2. Charge the battery(ies) or replace it/them with recharged battery(ies).
3. Let the machine and battery(ies) cool down.

If no improvement can be found by restoring protection system, then contact your local Makita Service Center.

NOTICE: **If the machine stops due to a cause not described above, refer to the section for troubleshooting.**

Main switches

⚠WARNING: **Always turn off the machine when it is not in use.**

To turn on the machine, press the main power button. The mode lamps light up in green. To turn off, press the main power button again.

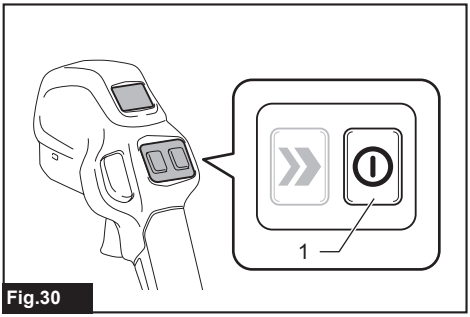

Fig.30

► **1.** Main power button

Two ranges of speed can be controlled by mode settings. Air volume in mode 1 (low-mode) becomes smaller than in mode 2 (high-mode). Select either of the two operation modes according to practical applications.

Press the mode button to toggle between mode 1 (low-mode) and mode 2 (high-mode) until the mode lamps indicate the mode you want to select.

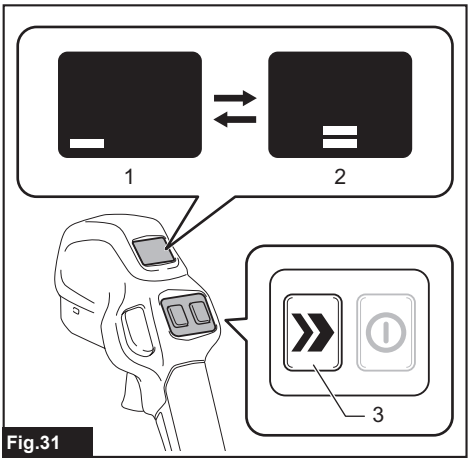

Fig.31

► **1.** Mode 1 (low-mode) indication **2.** Mode 2 (high-mode) indication **3.** Mode button

Blowing performance with battery model BL4080H

Mode indication	Mode	Air volume
	High	0 - 19.1 m^3/min
	Low	0 - 13.8 m^3/min

Blowing performance with battery model BL4080F and others

Mode indication	Mode	Air volume
	High	0 - 16.2 m^3/min
	Low	0 - 13.8 m^3/min

NOTE: The machine restarts in the mode you have selected before.

NOTE: The mode lamps automatically go out if you release the switch trigger and no further switch action is made for a certain period.

NOTE: If you press the main power button while pulling the switch trigger, the machine does not start and the alert lamp blinks in red. To start the machine, first release the switch trigger. Then pull the switch trigger again.

Switch action

⚠WARNING: **Before installing the battery cartridges into the machine, always check to see that the switch trigger actuates properly and it returns to the "OFF" position when released.**

Pull the switch trigger to start the machine. The speed increases by gradually applying pressure on the switch trigger. Release the switch trigger to stop the machine.

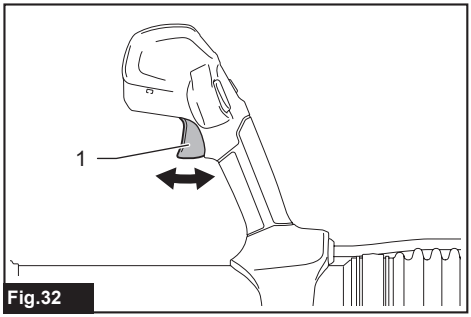

Fig.32

► **1.** Switch trigger

Cruise control feature

The cruise control feature allows the operator to maintain constant speed control without pulling the switch trigger.

Press the cruise control button when your desired speed has been reached by squeezing the switch trigger.
The machine will maintain that speed on its own even after you release the switch trigger.
To cancel cruise control, press the cruise control button while the switch trigger is released.

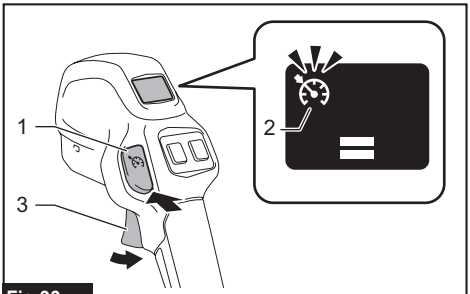

Fig.33

► **1.** Cruise control button **2.** Cruise control lamp **3.** Switch trigger

NOTE: The cruise control lamp lights up in green while cruise control is engaged.

NOTE: The rate of constant speed control varies according to the mode you are in.

Manual cruise control

At the speed range above the cruise control speed, you can manually control your rate.
Accelerate higher than the cruise control speed at any time by squeezing the switch trigger more than you pre-set.

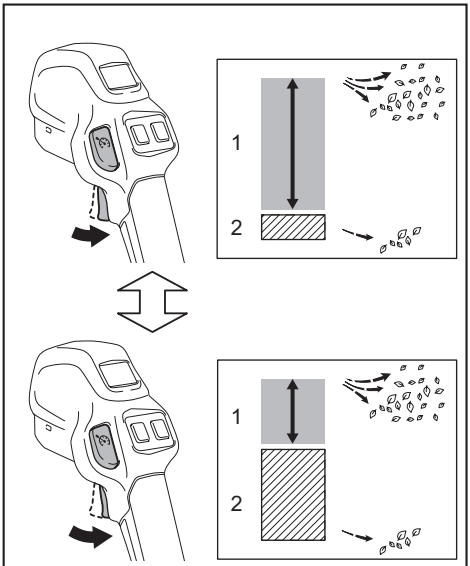

Fig.34

► **1.** Manual speed range **2.** Cruise control speed

NOTE: If you want to change your cruise rate to higher, squeeze the switch trigger more than you pre-set, and press the cruise control button again when the desired speed is reached.

NOTE: If you want to change your cruise rate to lower, disengage cruise control first by pressing the cruise control button with the switch trigger released. Then reset cruise control.

Electronic function

The machine is equipped with the electronic function for easy operation.

- Constant speed control
  The speed control function provides the constant rotation speed regardless of load conditions.

Accidental re-start preventive function

If you press the main power button while pulling the switch trigger, the machine does not start and the alert lamp blinks in red. To start the machine, first release the switch trigger. Then pull the switch trigger again.

OPERATION

⚠***CAUTION:*** **When putting on the machine, be sure to put shoulder harness on your both shoulders.** Failure to do so may cause the machine to fall and result in injury when you use the machine.

⚠***CAUTION:*** **When putting on the machine, be sure to put on the machine on your back.** Otherwise, the machine may fall during operation and cause an injury.

⚠***CAUTION:*** **Avoid excessive strain on the shoulder harness.** Only use the harness within its load capacity to avoid overstretching or weakening.

⚠***CAUTION:*** **Do not place the machine on the ground while it is running.** Sand or dust may enter from suction inlet and cause a malfunction or personal injury.

⚠***CAUTION:*** **Avoid blockages on the air vent holes and blower outlet caused by potential abuse or unintended use of the machine.**

⚠***CAUTION:*** **Adjust the air volume adequately to prevent you from losing balance during operation.** The machine can generate high blowing power. If the operator does not control the machine carefully, it may move unexpectedly.

NOTICE: **Hold the carry handle grip firmly when carrying the machine to prevent slipping and injury.**

Hold the control handle firmly and perform the blowing operation by moving it around slowly. When blowing around building, big stone or vehicle, direct the nozzle away from them. When performing an operation in a corner, start from the corner and then move to wide area.

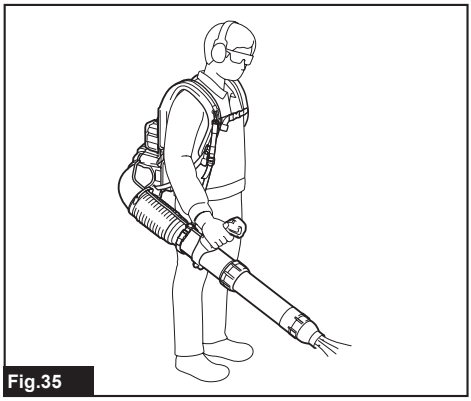

Fig.35

When setting down the machine, unlock the buckles of the chest belt and the waist support belt if any. Then set the machine down slowly on a stable surface such as a workbench.

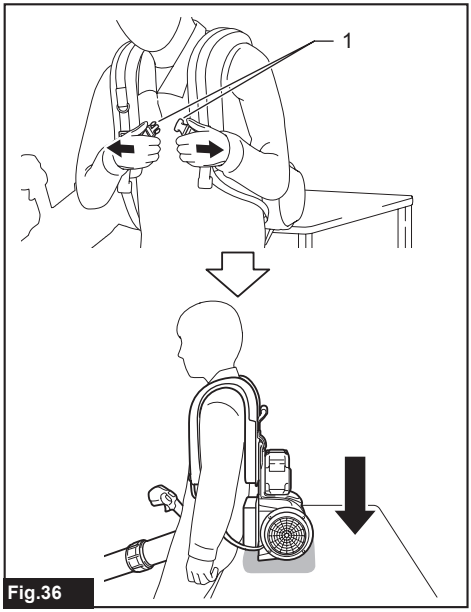

Fig.36

► **1.** Buckle

MAINTENANCE

⚠*CAUTION:* Always be sure that the machine is switched off and the battery cartridges are removed before attempting to perform inspection or maintenance.

To maintain product SAFETY and RELIABILITY, repairs and any other maintenance or adjustment should be performed by Makita Authorized or Factory Service Centers, always using Makita replacement parts.

Cleaning the machine

***NOTICE:* Never use gasoline, benzine, thinner, alcohol or the like. Discoloration, deformation or cracks may result.**

Clean the machine by wiping off dust with a dry cloth or one dipped in soapy water and wrung out.

Remove dust or dirt from the air vent.

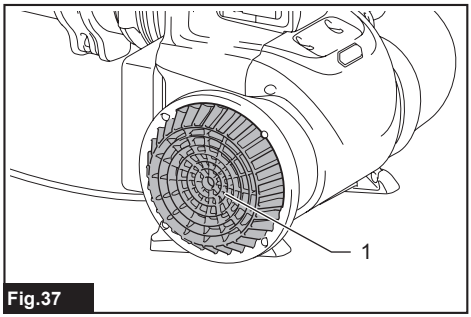

Fig.37

► **1.** Air vent

Storage

Always remove the battery cartridges before storing the machine. Store the machine in a place out of the reach of children and not exposed to moisture, rain, or direct sunlight.

You can buckle the folding strap to the left shoulder harness from behind.
Stand the blower pipes in an upright position for safe and space saving storage.

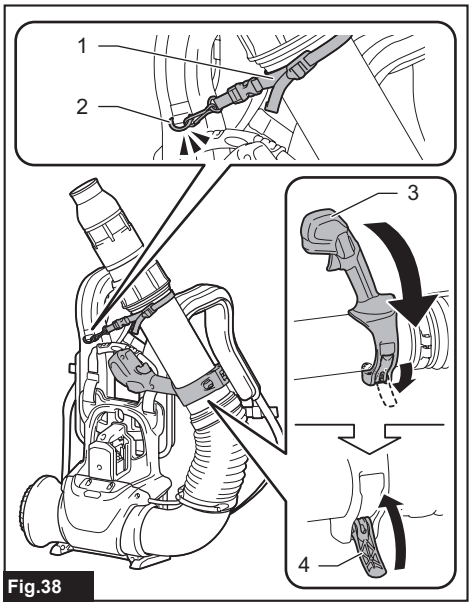

Fig.38

► **1.** Folding strap **2.** Hanger ring **3.** Control handle **4.** Clamp lever

NOTE: Turn the control handle down to the closed position as shown in the figure. It helps the machine stay stable.

A hang hole allows for easy storage when not in use or travelling between work sites. You can also use a hang hole to make it comfortable to grab and go.

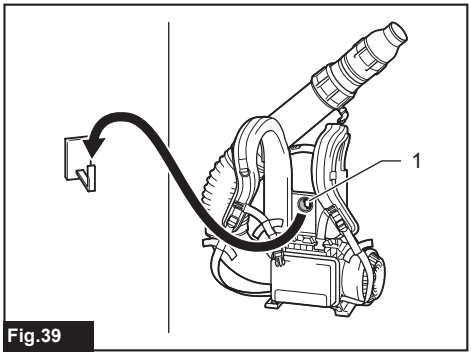

Fig.39

► **1.** Hang hole

TROUBLESHOOTING

Before asking for repairs, conduct your own inspection first. If you find a problem that is not explained in the manual, do not attempt to dismantle the machine. Instead, ask Makita Authorized Service Centers, always using Makita replacement parts for repairs.

State of abnormality	Probable cause (malfunction)	Remedy
Motor does not run.	Battery is not installed.	Install the battery.
	Battery problem (under voltage)	Recharge the battery. If recharging is not effective, replace battery.
	The drive system does not work correctly.	Ask your local authorized service center for repair.
Motor stops running after a little use.	Battery's charge level is low.	Recharge the battery. If recharging is not effective, replace battery.
	Overheating.	Stop using the machine to allow it to cool down.
The machine does not reach the maximum speed.	Battery is installed improperly.	Install the battery as described in this manual.
	Battery power is dropping.	Recharge the battery. If recharging is not effective, replace battery.
	The drive system does not work correctly.	Ask your local authorized service center for repair.
Abnormal vibration: ⇨ stop the machine immediately!	The drive system does not work correctly.	Ask your local authorized service center for repair.
Motor cannot stop: ⇨ Remove the battery immediately!	Electric or electronic malfunction.	Remove the battery and ask your local authorized service center for repair.

OPTIONAL ACCESSORIES

⚠***CAUTION:*** **These accessories or attachments are recommended for use with your Makita product specified in this manual.** The use of any other accessories or attachments might present a risk of injury to persons. Only use accessory or attachment for its stated purpose.

If you need any assistance for more details regarding these accessories, ask your local Makita Service Center.

- End nozzle 81
- Flat nozzle
- Waist support belt
- Battery holder
- Makita genuine battery and charger

NOTE: Some items in the list may be included in the product package as standard accessories. They may differ from country to country.

Makita Corporation
3-11-8, Sumiyoshi-cho,
Anjo, Aichi 446-8502 Japan
www.makita.com

885B55-929
EN
20260114