HK	HONG KONG

Diagram / Parts List

UB005G

CORDLESS BLOWER VACUUM



2026/02

(HK) UB005G / CORDLESS BLOWER VACUUM

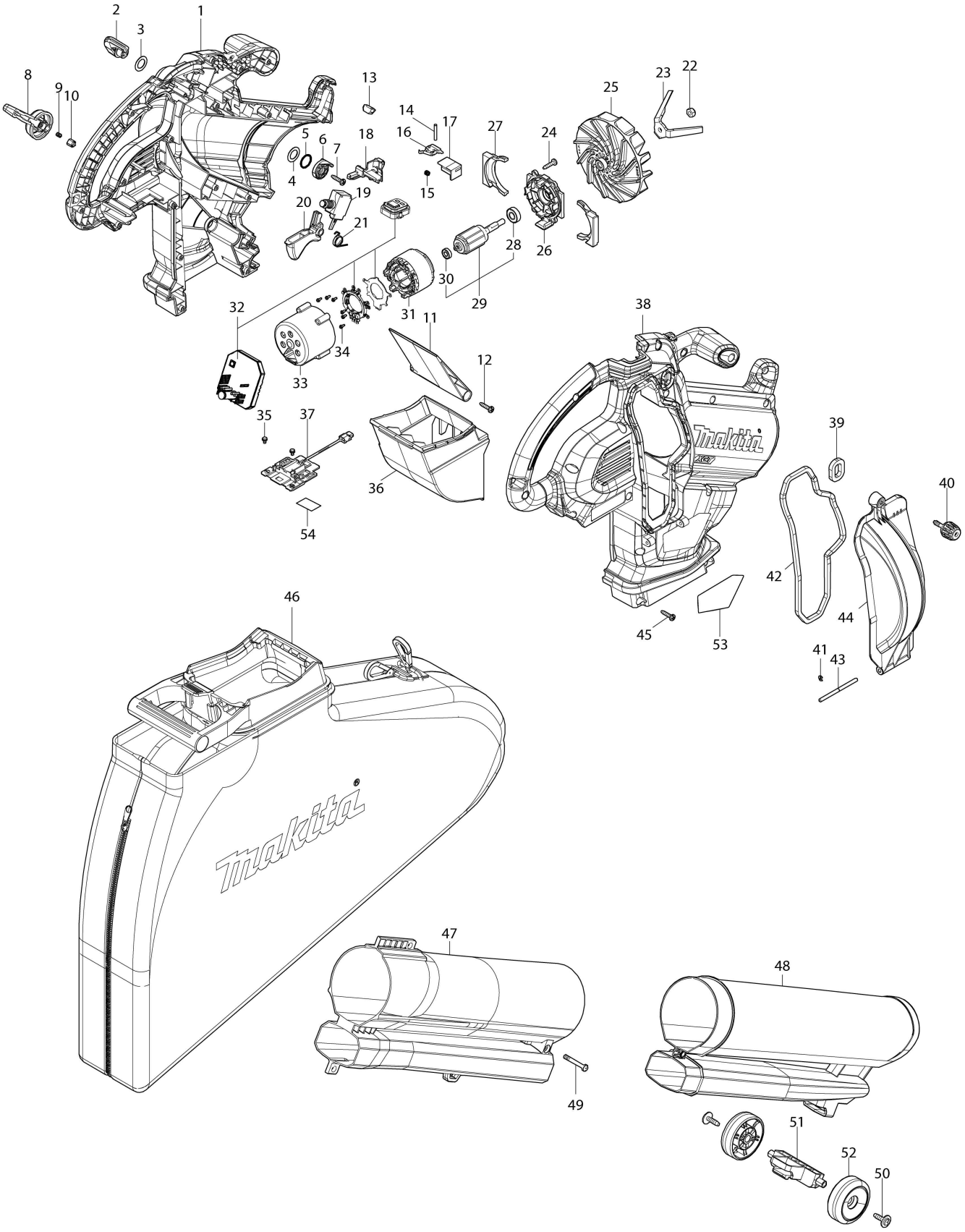

HK HONG KONG

UB005G / CORDLESS BLOWER VACUUM

Item	Sub	Parts No.	Parts Description	Qty	I/C	E/C No.	Close No.	Remark
001		1832D3-0	HOUSING SET	1				
	C10	263005-3	Rubber pin 6	2				
	C20	8098M4-6	CAUTION LABEL	1				
	D10		INC. 38					
002		4134V1-1	CONTROL LEVER	1				
003		253575-0	Flat washer 13	1				
004		253798-0	Flat washer 13	1				
005		213154-6	O-ring 14	1				
006		412754-1	Link	1				
007		266326-2	Binding head tapping screw 4X18	1				
008		4134V3-7	CHANGE LEVER	1				
009		234244-2	Compression spring 3	1				
010		4134V5-3	LOCK PIN	1				
011		4134V4-5	SEPARATOR	1				
012		266326-2	Binding head tapping screw 4X18	1				
013		620T39-3	LED CIRCUIT	1				
014		256221-4	Pin 3	1				
015		233118-4	Compression spring 4	1				
016		632P71-1	Switch unit	1				
017		4134U9-8	PUSHER	1				
018		4134V2-9	GUIDE	1				
019		650085-2	SWITCH C3JR-1AV-PAXD3-3	1				
020		4134V0-3	SWITCH LEVER	1				
021		232984-6	TORSION SPRING 12	1				
022		252190-7	Hex. lock nut M6-10	1				
023		347E77-7	SHREDDER	1				
024		266326-2	Binding head tapping screw 4X18	4				
025		240268-8	FAN 115	1				
026		4134U7-2	MOTOR HOUSING COVER	1				
027		422D24-4	RUBBER	2				
028		210040-2	Ball bearing 698LLU	1				
029		519943-0	ROTOR ASS'Y	1				
	D10		INC. 28,30					
030		210215-3	Ball bearing 695ZZ	1				
031		629D68-7	STATOR	1				
032		620T38-5	CONTROLLER	1				
033		4134U6-4	MOTOR HOUSING	1				
034		652119-7	Pan head screw M2X6	6				
035		652031-1	Pan head screw M3X6	2				
036		4134W4-2	DUCT	1				
037		632V23-8	Terminal unit	1				
038		1832D3-0	HOUSING SET	1				
	C10	263005-3	Rubber pin 6	2				
	C20	8098M4-6	CAUTION LABEL	1				
	D10		INC. 1					
039		422D17-1	SEAL B	1				
040		265E88-9	THUMB SCREW M5X20	1				
041		961017-7	Stop ring (EXT) E-3	1				
042		422D23-6	SEAL A	1				
043		327G38-5	ROD 4	1				
044		4134U8-0	FAN COVER	1				
045		266326-2	Binding head tapping screw 4X18	20				
046		162E41-5	DUST BAG COMPLETE	1				
047		4134W2-6	UPPER NOZZLE	1				
048		4134W3-4	LOWER NOZZLE	1				
049		265E89-7	+ PAN HEAD SCREW M5X35	1				
050		265C05-7	Flange tapping screw 5X20	2				
051		4134V6-1	WHEEL BRACKET	1				
052		4134V7-9	WHEEL 60	2				
053		8154V3-7	UB005G NAME PLATE	1				
054		8154V4-5	UB005G SERIAL NO. LABEL	1				
A01		122J43-3	BAND ASSEMBLY	1				
A02		1918B8-8	WIDE NOZZLE SET	1				
E01		804233-7	SOUND 101DB LABEL	1				
F01		1917G3-7	HARNESS COVER SET	1				

Interchange
O : Yes
X : No
< : the new part can be substituted for the current.
> : the current part can be substituted for the new.
S : Interchangeable as a set.

HK HONG KONG

UB005G / CORDLESS BLOWER VACUUM

Item	Sub	Parts No.	Parts Description	Qty	I/C	E/C No.	Close No.	Remark
F02		1918B8-8	WIDE NOZZLE SET	1				
F03		1918R3-0	JOINT A HOSE ATTACHMENT SET	1				

Interchange
O : Yes
X : No
< : the new part can be substituted for the current.
> : the current part can be substituted for the new.
S : Interchangeable as a set.