HK	HONG KONG

Diagram / Parts List

UB403MP

BLOWER ATTACHMENT



2025/04

(HK) UB403MP / BLOWER ATTACHMENT

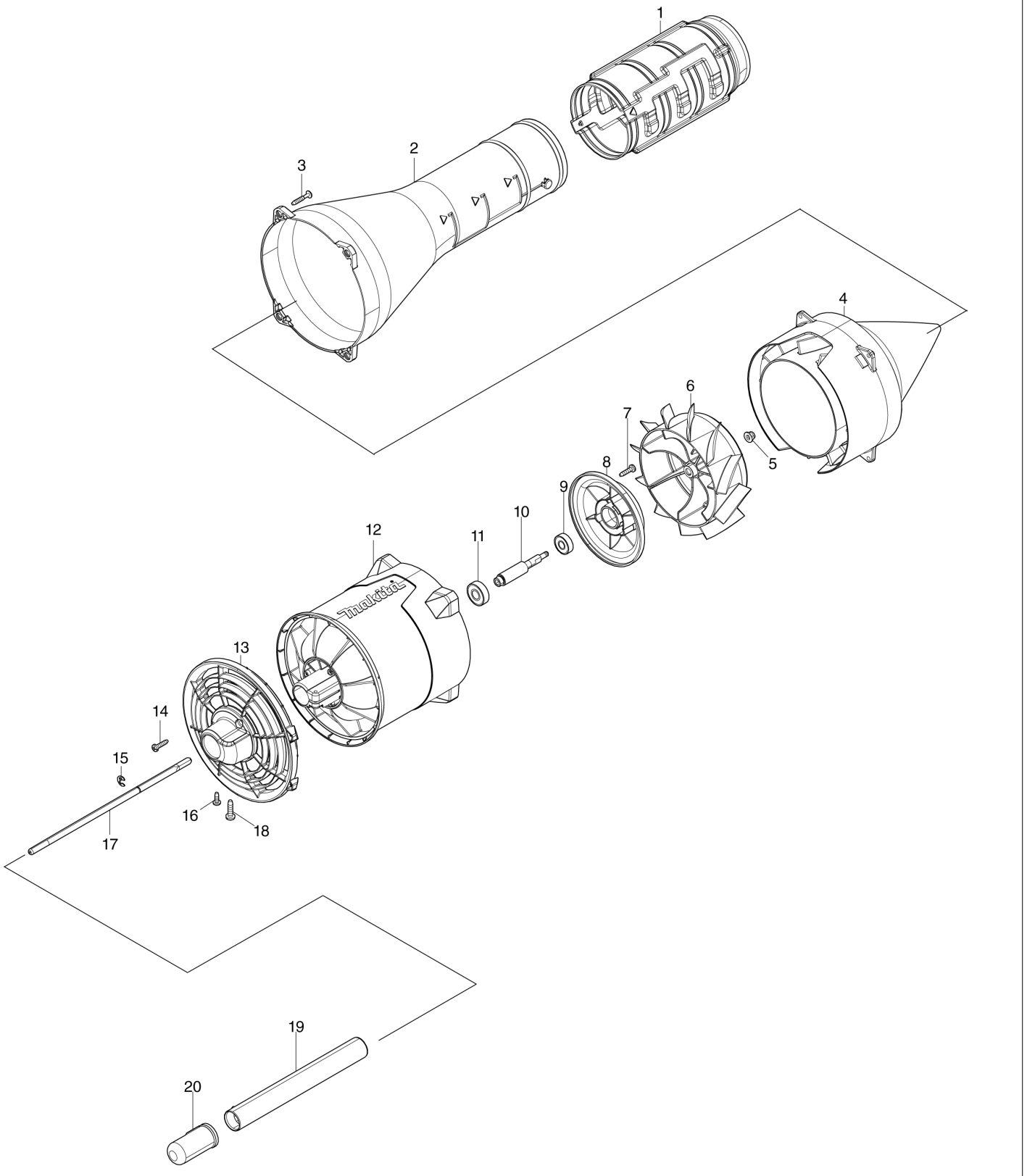

HK HONG KONG

UB403MP / BLOWER ATTACHMENT

Item	Sub	Parts No.	Parts Description	Qty	I/C	E/C No.	Close No.	Remark
001		4132A1-2	NOZZLE	1				
002		4132A0-4	ADAPTER	1				
003		266374-1	TAPPING SCREW 4X25	4				
004		4132A3-8	HOUSING A	1				
005		252286-4	COLLARED HEX.LOCK NUT M5-8	1				
006		240258-1	FAN 149	1				
007		266326-2	TAPPING SCREW 4X18	3				
008		4132A5-4	BEARING COVER	1				
009		210200-6	BALL BEARING 608DDW	1				
010		327B55-5	SPINDLE	1				
011		210141-6	BALL BEARING 6000DDW	1				
012		1410Y3-1	HOUSING B COMPLETE	1			DY509	
	C10	8078L5-1	CAUTION LABEL	1			DY509	
012-1		1412R5-0	HOUSING B COMPLETE	1	S	DY509		
	C10	8078L5-1	CAUTION LABEL	1		DY509		
013		4132A2-0	REAR COVER	1				
014		266326-2	TAPPING SCREW 4X18	3				
015		961012-7	STOP RING E-6	1				
016		266427-6	TAPPING SCREW 4X12	1			DY509	
017		327415-9	SHAFT	1				
018		266420-0	TAPPING SCREW 5X20	1				
019		1412P2-2	SHAFT PIPE COMPLETE B	1			DY509	
019-1		1412R9-2	SHAFT PIPE COMPLETE B	1	S	DY509		
	C10	163525-6	LEAF SPRING COMPLETE	2		DY509		
020		424434-7	CAP 24	1				
E01		8085T3-6	SOUND LABEL	1				

Z:

Interchange
O : Yes
X : No
< : the new part can be substituted for the current.
> : the current part can be substituted for the new.
S : Interchangeable as a set.