HK	HONG KONG

Diagram / Parts List

UG001G

CORDLESS GROUND TRIMMER



2026/01

(HK) UG001G / CORDLESS GROUND TRIMMER

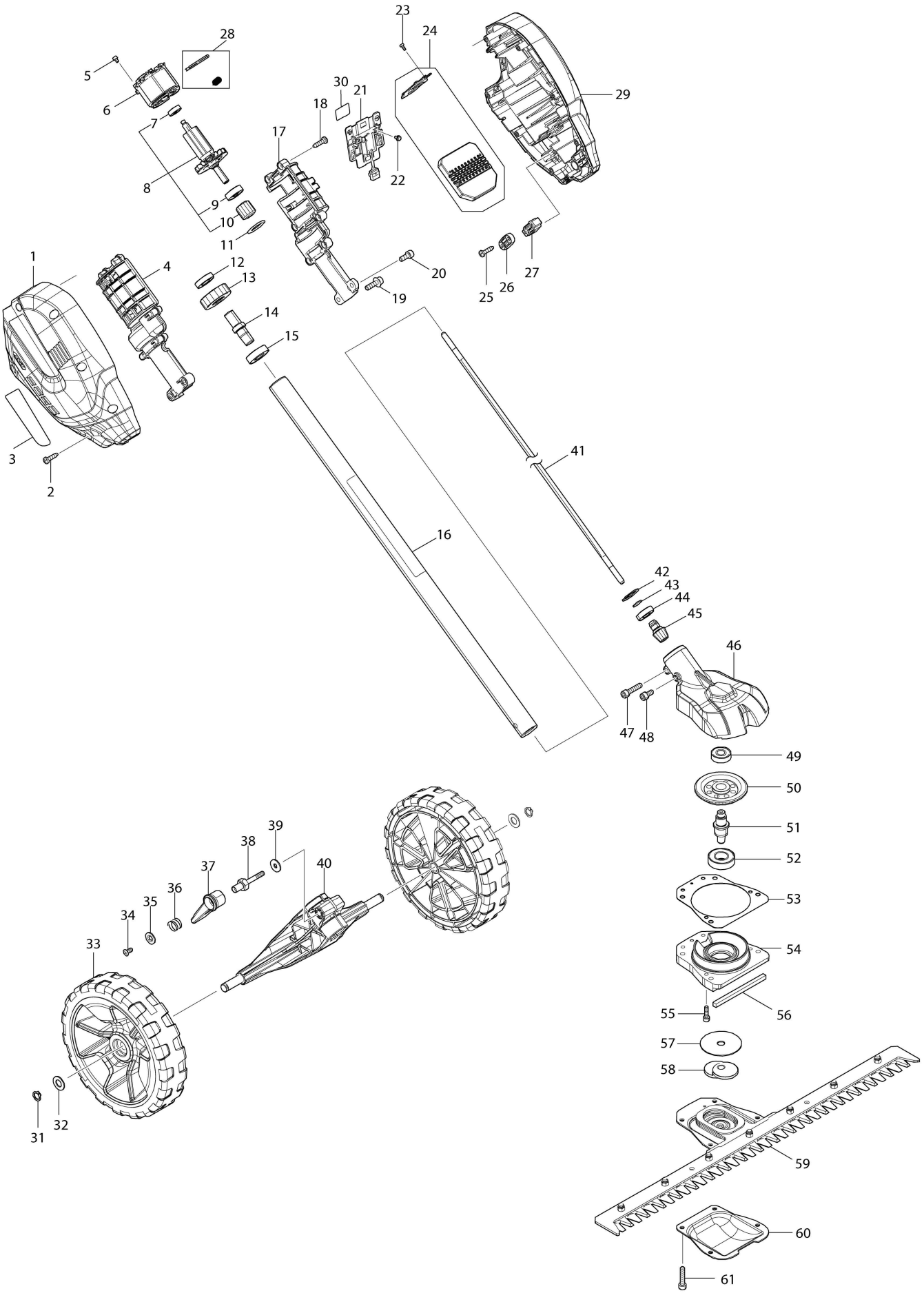

(HK) UG001G / CORDLESS GROUND TRIMMER

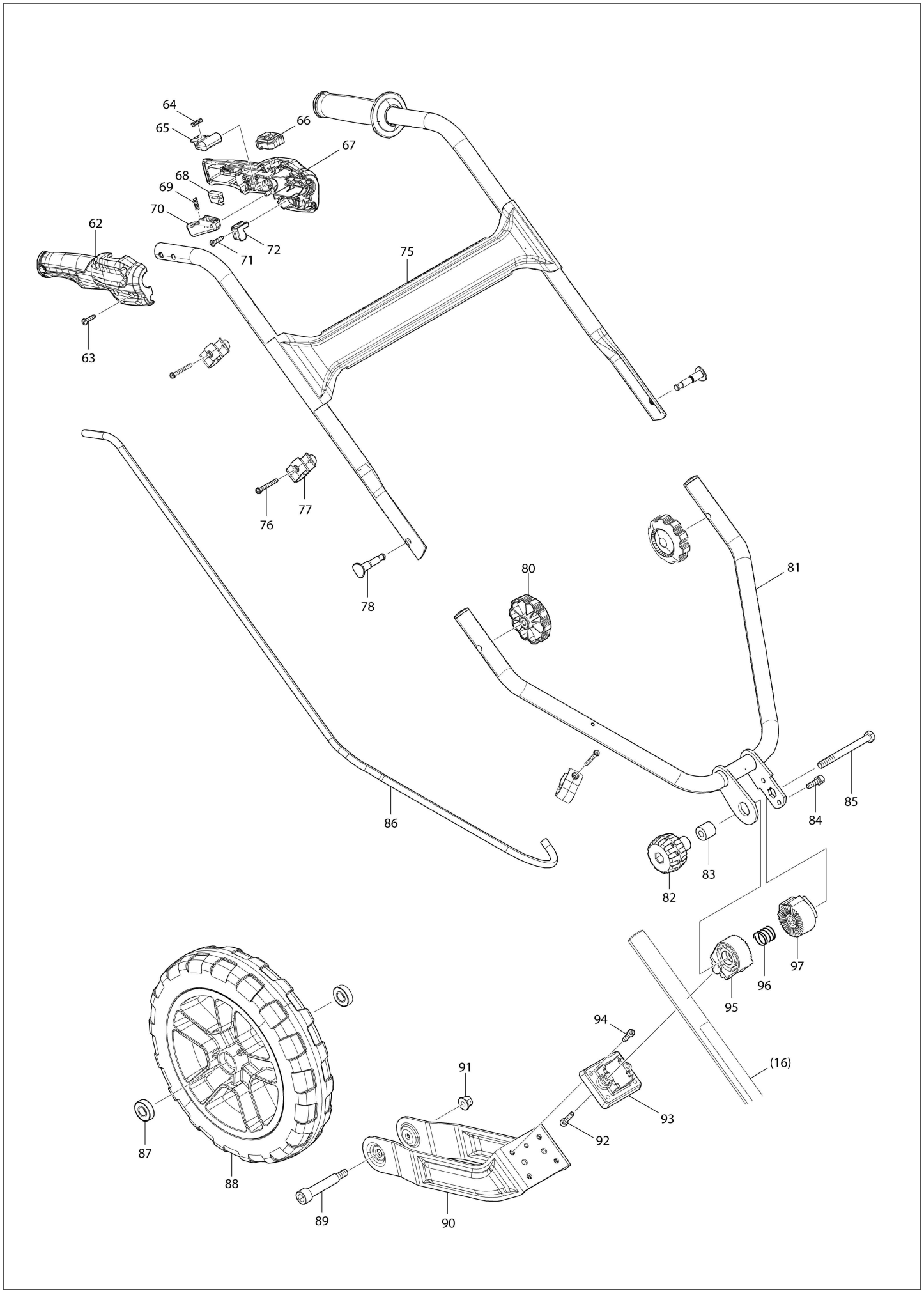

HK HONG KONG

UG001G / CORDLESS GROUND TRIMMER

Item	Sub	Parts No.	Parts Description	Qty	I/C	E/C No.	Close No.	Remark
001		1832G2-3	HOUSING SET	1				
	C10	263005-3	Rubber pin 6	2				
	D10		INC. 29					
002		266326-2	Binding head tapping screw 4X18	7				
003		8155B8-3	UG001G NAME PLATE	1				
004		183X80-6	Motor housing set	1				
	D10		INC. 17					
005		652069-6	Flat head screw M3X6	3				
006		629340-3	Stator	1				
007		210235-7	Ball bearing 625ZZ	1				
008		519940-6	ROTOR ASS'Y	1				
	D10		INC. 7,9,10					
009		210236-5	Ball bearing 627ZZ	1				
010		227A68-9	Helical gear 16	1				
011		213925-1	O-ring 21	1				
012		210243-8	Ball bearing 6901ZZ	1				
013		227848-7	Helical gear 33	1				
014		327719-9	Spindle hub	1				
015		210244-6	Ball bearing 6001ZZ	1				
016		1413D3-2	SHAFT PIPE COMPLETE A	1				
	C10	8098V2-3	CAUTION LABEL	1				
017		183X80-6	Motor housing set	1				
	D10		INC. 4					
018		266326-2	Binding head tapping screw 4X18	6				
019		922234-4	Hex. socket head bolt M5X20 WG	2				
020		922216-6	Hex. socket head bolt M5X14 W	1				
021		632W79-7	TERMINAL UNIT	1				
022		652031-1	Pan head screw M3X6	2				
023		266490-9	Pan head tapping screw 2X6	3				
024		620T54-7	CONTROLLER	1				
025		266326-2	Binding head tapping screw 4X18	2				
026		687123-7	Strain relief	1				
027		687051-6	Strain relief	1				
028		632R79-7	Lead unit	1				
029		1832G2-3	HOUSING SET	1				
	C10	263005-3	Rubber pin 6	2				
	D10		INC. 1					
030		8155C2-2	UG001G SERIAL NO. LABEL	1				
031		961006-2	Retaining ring (EXT) S-10	2				
032		253828-7	Flat washer 10	2				
033		4135D5-3	WHEEL 180	2				
034		265135-6	Countersunk head screw M4X10	1				
035		347577-7	Washer 6	1				
036		234347-2	Compression spring 11	1				
037		271477-8	LEVER 53	1				
038		265E61-9	HEX.BOLT M5X32	1				
039		253047-5	Flat washer 6	1				
040		4133U0-0	WHEEL HOLDER 300	1				
041		327G55-5	SHAFT A	1				
042		962102-9	Retaining ring (INT) R-22	1				
043		961036-3	Retaining ring (EXT) WR-10	1				
044		210167-8	Ball bearing 6900LLB	1				
045		227A88-3	Spiral bevel gear 11	1				
046		141S15-3	Gear housing complete	1				
047		922241-7	Hex. socket head bolt M5X25 W	1				
048		922211-6	Hex. socket head bolt M5X12 W	1				
049		211493-8	Ball bearing 609DDW	1				
050		227A89-1	Spiral bevel gear 52	1				
051		327C06-4	Spindle	1				
052		211247-3	Ball bearing 6002DDW	1				
053		422A36-9	Gasket	1				
054		141S16-1	Gear housing cover complete	1				
055		922126-7	Hex. socket head bolt M4X16 W	4				
056		422A37-7	Dust guard	1				
057		347B34-7	Friction plate U	1				

Interchange
O : Yes
X : No
< : the new part can be substituted for the current.
> : the current part can be substituted for the new.
S : Interchangeable as a set.

HK HONG KONG

UG001G / CORDLESS GROUND TRIMMER

Item	Sub	Parts No.	Parts Description	Qty	I/C	E/C No.	Close No.	Remark
058		327C07-2	Crank	1				
059		1916X3-0	SHEAR BLADE 500 SET	1				
	C10	252331-5	Hex. lock nut M5-8	7				
	C20	257A04-1	Sleeve 5	7				
	C30	257A05-9	Ring 8	7				
	C40	265E60-1	+TRUSS HEAD SCREW M5X16	7				
	C50	199450-5	Grease vessel set	1				
060		347B49-4	Under plate	1				
061		265D17-6	Hex. socket head bolt M5X25	4				
062		1832G3-1	GRIP SET	1				
	C10	263005-3	Rubber pin 6	1				
	D10		INC. 67					
063		266326-2	Binding head tapping screw 4X18	5				
064		231473-8	Compression spring 4	1				
065		4135D7-9	LOCK OFF BUTTON	1				
066		620T84-8	SWITCH CIRCUIT	1				
067		1832G3-1	GRIP SET	1				
	C10	263005-3	Rubber pin 6	1				
	D10		INC. 62					
068		632X03-6	SWITCH UNIT	1				
069		231473-8	Compression spring 4	1				
070		4135D4-5	SWITCH LEVER	1				
071		266326-2	Binding head tapping screw 4X18	1				
072		687260-7	Strain relief	1				
075		137466-2	HANDLE 22 UPPER ASS'Y	1				
076		911163-6	Pan head screw M4X35 WR	3				
077		413944-9	Clamp	3				
078		265F13-6	FLAT HEAD BOLT M8X50	2				
080		265C06-5	Thumb nut M8	2				
081		137426-4	HANDLE 22 LOWER ASS'Y	1				
082		252640-2	Thumb nut M8	1				
083		257A72-4	SLEEVE 8	1				
084		922331-6	Hex. socket head bolt M6X20 W	2				
085		266745-2	Hex. head bolt M8X90	1				
086		699260-5	POWER SUPPLY CORD UNIT	1				
087		210341-8	BALL BEARING 6001LLU	2				
088		1413D1-6	TIRE 300 COMPLETE	1				
089		265E95-2	SHOULDER HEX. BOLT M8	1				
090		347E91-3	FORK	1				
091		252364-0	COLLARED HEX. LOCK NUT M8-13	1				
092		922241-7	Hex. socket head bolt M5X25 W	2				
093		312J96-2	HANDLE HOLDER	1				
094		922231-0	Hex. socket head bolt M5X20 W	4				
095		312J97-0	HANDLE HOLDER CAM	1				
096		233309-7	Compression spring 16	1				
097		312J98-8	HANDLE CAM	1				
A01		4133V1-5	BLADE COVER 500	1				
A02		422A15-7	Cap 24	1				
A03		424434-7	Cap 24	1				
A04		783202-0	Hex. wrench 4	1				
F01		1912V6-6	Shear blade 330 set	1				
F02		1916X3-0	SHEAR BLADE 500 SET	1				

Interchange
O : Yes
X : No
< : the new part can be substituted for the current.
> : the current part can be substituted for the new.
S : Interchangeable as a set.