HK	HONG KONG

Diagram / Parts List

UH014G

750MM CORDLESS HEDGE TRIMMER



2025/10

(HK) UH014G / 750MM CORDLESS HEDGE TRIMMER

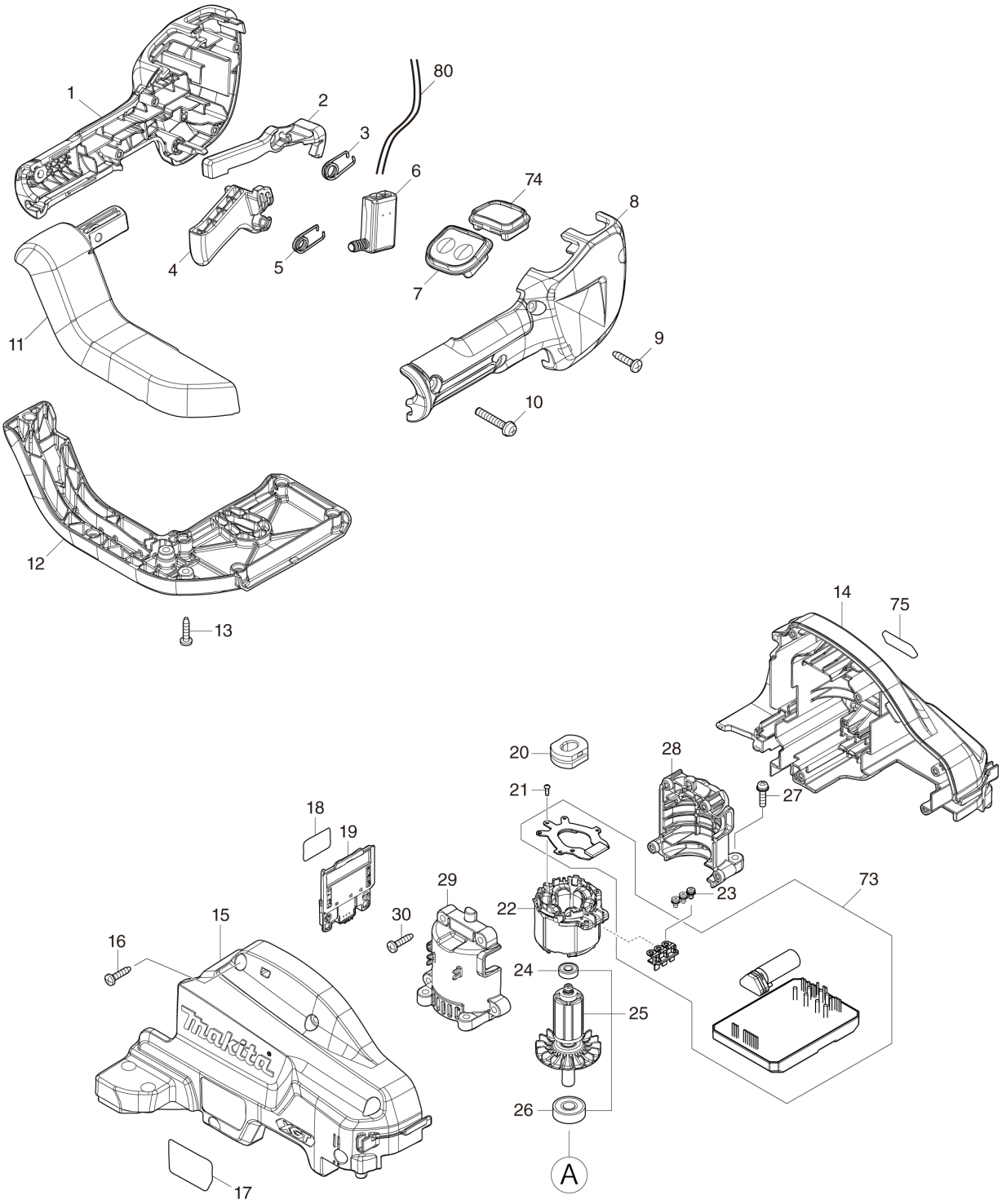

(HK) UH014G / 750MM CORDLESS HEDGE TRIMMER

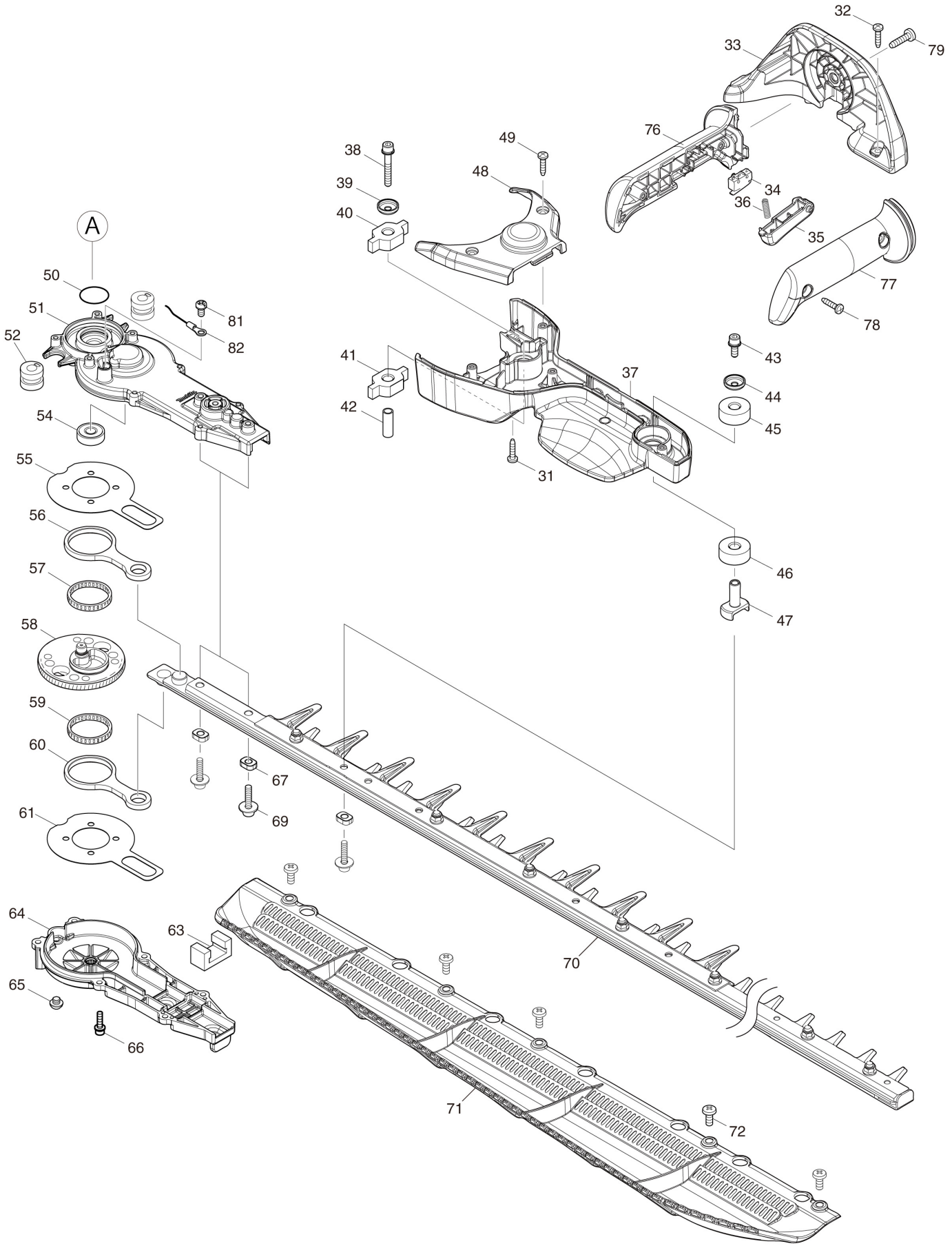

HK | HONG KONG

UH014G / 750MM CORDLESS HEDGE TRIMMER

Item	Sub	Parts No.	Parts Description	Qty	I/C	E/C No.	Close No.	Remark
001		183U16-7	GRIP SET	1			DT036	
	C10	252180-0	HEX. LOCK NUT M5-8	1			DT036	
	D10		INC. 8				DT036	
001-1		1830S0-9	GRIP SET	1	O	DT036		
	C10	252180-0	HEX. LOCK NUT M5-8	1		DT036		
	D10		INC. 8			DT036		
002		455629-1	LOCK OFF LEVER	1			DP453	
002-1		413Y35-6	LOCK OFF LEVER	1	O	DP453		
003		233621-5	TORSION SPRING 9	1				
004		412315-7	SWITCH LEVER R	1				
005		233621-5	TORSION SPRING 9	1				
006		651083-9	SWITCH C3XA-1PSPM	1				
007		141D66-6	SWITCH CIRCUIT COMPLETE E	1				
	C10	8034K3-2	SWITCH LABEL	1				
008		183U16-7	GRIP SET	1			DT036	
	C10	252180-0	HEX. LOCK NUT M5-8	1			DT036	
	D10		INC. 1				DT036	
008-1		1830S0-9	GRIP SET	1	O	DT036		
	C10	252180-0	HEX. LOCK NUT M5-8	1		DT036		
	D10		INC. 1			DT036		
009		266326-2	TAPPING SCREW 4X18	4				
010		911253-5	PAN HEAD SCREW M5X30	1				
011		413B85-3	GRIP JOINT E	1				
012		413B86-1	GRIP JOINT COVER E	1				
013		266326-2	TAPPING SCREW 4X18	8				
014		183U17-5	HOUSING SET	1			E0614	
	C10	263005-3	RUBBER PIN 6	2			E0614	
	C20	424344-8	DAMPER	4			E0614	
	D10		INC. 15				E0614	
014-1		183U17-5	HOUSING SET	1	O	E0614		
	C10	263005-3	RUBBER PIN 6	2		E0614		
	C20	424344-8	DAMPER	4		E0614		
	D10		INC. 15			E0614		
015		183U17-5	HOUSING SET	1			E0614	
	C10	263005-3	RUBBER PIN 6	2			E0614	
	C20	424344-8	DAMPER	4			E0614	
	D10		INC. 14				E0614	
015-1		183U17-5	HOUSING SET	1	O	E0614		
	C10	263005-3	RUBBER PIN 6	2		E0614		
	C20	424344-8	DAMPER	4		E0614		
	D10		INC. 14			E0614		
016		266326-2	TAPPING SCREW 4X18	5				
017		8113B9-7	UH014G NAME PLATE	1				
018		8113C5-2	UH014G SERIAL NO. LABEL	1				
019		632P75-3	TERMINAL UNIT	1				
020		422261-6	RUBBER SLEEVE	1				
021		266490-9	TAPPING SCREW PT 2X6	3				
022		629A75-2	STATOR	1				
023		652069-6	FLAT HEAD SCREW M3X6	3				
024		211157-4	BALL BEARING 695ZZ	1				
025		519693-7	ROTOR ASSY	1				
	D10		INC. 24,26					
026		210005-4	BALL BEARING 608DDW	1				
027		911128-8	P.H.SCREW M4X16 WITH WR	4				
028		183S94-5	MOTOR HOUSING SET	1				
	D10		INC. 29					
029		183S94-5	MOTOR HOUSING SET	1				
	D10		INC. 28					
030		266326-2	TAPPING SCREW 4X18	4				
031		266326-2	TAPPING SCREW 4X18	6				
032		266326-2	TAPPING SCREW 4X18	2				
033		413B91-8	FRONT GRIP RETAINER A	1				
034		632T12-1	SWITCH UNIT	1				
035		413B87-9	SWITCH LEVER F	1				
036		232353-1	COMPRESSION SPRING 4	1				

Z:UH014GZ(N)

Interchange
O : Yes
X : No
< : the new part can be substituted for the current.
> : the current part can be substituted for the new.
S : Interchangeable as a set.

HK HONG KONG

UH014G / 750MM CORDLESS HEDGE TRIMMER

Item	Sub	Parts No.	Parts Description	Qty	I/C	E/C No.	Close No.	Remark
037		141G33-9	FRONT GRIP BASE COMPLETE	1			DT719	
	C10	8034N8-3	CAUTION LABEL	1			DT719	
037-1		1410D2-6	FRONT GRIP BASE COMPLETE	1	O	DT719		
	C10	8074J9-5	CAUTION LABEL	1		DT719		
038		251476-6	H.S.H.BOLT M5X35 WITH WR	1			DJ608	
038-1		265D13-4	H.S.H.BOLT M5X35 WITH WRM	1	O	DJ608	DX308	
038-2		265E44-9	HEX.SOCKET HEAD BOLT M5X35 WRM	1	<	DX308		
039		253544-1	CUP WASHER 5	1				
040		422260-8	RUBBER SLEEVE 8	1				
041		422260-8	RUBBER SLEEVE 8	1				
042		257678-2	SLEEVE 6	1				
043		922218-2	H.S.H.BOLT M5X14 WITH WR	1				
044		253544-1	CUP WASHER 5	1				
045		422813-3	RUBBER SLEEVE 8	1				
046		422813-3	RUBBER SLEEVE 8	1				
047		327919-1	CONNECTOR	1				
048		413B95-0	FRONT GRIP COVER	1				
049		266326-2	TAPPING SCREW 4X18	2				
050		213961-7	O RING 22	1				
051		141J44-2	GEAR HOUSING COMPLETE	1				
	C10	263002-9	RUBBER PIN 4	1				
	C20	424344-8	DAMPER	1				
052		422725-0	RUBBER SLEEVE 8	2				
054		210223-4	BALL BEARING 608ZZ	1				
055		347361-0	FRICTION PLATE	1				
056		347662-6	CONNECTING ROD	1				
057		212229-8	NEEDLE CAGE 315	1				
058		141C40-8	GEAR COMPLETE	1				
059		212229-8	NEEDLE CAGE 315	1				
060		347662-6	CONNECTING ROD	1				
061		347361-0	FRICTION PLATE	1				
063		443159-4	SEAL	1				
064		141H42-4	GEAR HOUSING COVER COMPLETE	1				
065		266559-9	H.S.BUTTON HEAD BOLT M6X4	1				
066		922128-3	HEX. SOCKET HEAD BOLT M4X16	6				
067		310983-9	SLEEVE 5	3				
069		265A89-3	H.S.H.BOLT M5X25 WITH WR	3				
070		191Y05-2	SHEAR BLADE 750E SET	1				
	C10	188605-7	OIL VESSEL SET	1				
	C20	310983-9	SLEEVE 5	3				
	C30	347962-4	GUARD	1		Y09178		
	C40	253553-0	FLAT WASHER 5	6		Y09456		
	C50	252311-1	COLLARED HEX. LOCK NUT M5-8	8		Y09456		
	C60	265C41-3	+ TRUSS HEAD SCREW M5X22	8		Y09456		
	C70	310983-9	SLEEVE 5	8		Y09456		
071		191D34-9	CHIP RECEIVER 750 SET	1				
072		265B57-2	BINDING HEAD SCREW M5X12	5				
073		620G86-6	CONTROLLER	1			DS355	
	C10	688163-8	LINE FILTER	1			DS355	
073-1		620P63-2	CONTROLLER	1	<	DS355		
	C10	688163-8	LINE FILTER	1		DS355		
074		140W63-3	INDICATION CIRCUIT COMPLETE	1				
075		8025F3-0	XGT LOGO LABEL	1				
076		183U18-3	FRONT GRIP SET	1				
	D10		INC. 77					
077		183U18-3	FRONT GRIP SET	1				
	D10		INC. 76					
078		266326-2	TAPPING SCREW 4X18	2				
079		266420-0	TAPPING SCREW 5X20	1				
080		638A24-8	LEAD UNIT	1				
081		652014-1	PAN HEAD SCREW M4X8	1				
082		638A25-6	LEAD UNIT	1				
A01		413B99-2	BLADE COVER 750	1				
E01		891003-3	SOUND 93DB LABEL	1				
F01		191D34-9	CHIP RECEIVER 750 SET	1				

Z:UH014GZ(N)

Interchange
O : Yes
X : No
< : the new part can be substituted for the current.
> : the current part can be substituted for the new.
S : Interchangeable as a set.

HK HONG KONG

UH014G / 750MM CORDLESS HEDGE TRIMMER

Item	Sub	Parts No.	Parts Description	Qty	I/C	E/C No.	Close No.	Remark
F02		191Y05-2	SHEAR BLADE 750E SET	1				
F03		199450-5	GREASE VESSEL SET	1				

Z:UH014GZ(N)

Interchange
O : Yes
X : No
< : the new part can be substituted for the current.
> : the current part can be substituted for the new.
S : Interchangeable as a set.